EVERYTHING AT A GLANCE!

Technical documentation for our diaphragm valves

EVERYTHING AT A GLANCE

Aseptic diaphragm valves

1. Introduction.....3

1.1. General Information / Product Information.....3
1.2. Quality and Precision.....4
1.3. Goetze Process Test Bench.....4
1.4. Areas of application.....6
1.5. Certificates.....7
1.6. Reports.....8

2. Overview.....10

2.1. Diaphragm Valve Overview – Types and Variants.....10
2.2. Goetze Components.....12
2.3. Type code.....13
2.4. Technical advice.....15

3. Valve Body.....16

3.1. Description.....16
3.2. Valve body material and surfaces.....17
3.3. Connections valve body.....19
3.4. Body designs
3.4.1. 2/2-way straight valve body.....20
3.4.2. T valve body.....28
3.4.3. Tank bottom valve.....38
3.4.4. Valve blocks.....40
3.4.5. Welded combinations.....41

4. Diaphragms.....42

4.1. Goetze diaphragms.....42
4.2. The advantages of the innovative Goetze sealing system.....43
4.3. Flexible Goetze diaphragm mounting.....44
4.4. Advantages of Goetze diaphragms.....45
4.5. Conformities and tests.....46
4.6. Traceability.....47
4.7. Soft elastomer and PTFE diaphragms.....48
4.7.1. Goetze EPDM diaphragms.....49
4.7.2. Goetze PTFE diaphragms.....49
4.8. Goetze diaphragm selection.....50
4.9. Goetze diaphragm dimensions.....51
4.10. Goetze diaphragm expertise.....52
4.11. Manufacture of Goetze diaphragms.....52
4.12. In-process testing and documentation at Goetze.....53
4.13. Storage and shelf life of elastomer components.....53
4.14. Goetze replacement diaphragm.....54

5. Goetze actuators.....56

5.1. Goetze manually operated actuators.....56
5.2. Goetze pneumatic actuators.....58
5.3. Position indicator.....60

6. Glossary.....62

1. INTRODUCTION

1.1. General information / Product information

ASEPTIC VALVE TECHNOLOGY FOR THE MOST DEMANDING REQUIREMENTS

For over 75 years, Goetze KG Armaturen has been synonymous with innovative and reliable valve solutions "Made in Germany". At our headquarters in Ludwigsburg, we **develop and manufacture** high-performance valves for media under pressure – including specialised stainless steel valves for the **pharmaceutical and biotech industries**, as well as for the **life sciences, food & beverage and cosmetics sectors**.

To meet the complex requirements of hygiene-critical applications, we at Goetze have established a **specialised team of experts**. This team brings together our comprehensive expertise from the pharmaceutical, biotech, life sciences, food & beverage and cosmetics sectors. Here, we create bespoke solutions that meet the highest standards of **technical precision, purity and process reliability**.

Our product lines comply with all relevant standards and regulations, such as **EHEDG, FDA, USP Class VI and 3-A Sanitary Standards**. The development of new valves is consistently guided by the requirements of operational practice – for **optimal integration** into your processes.

We have specifically expanded our manufacturing capacities for aseptic applications; the production of diaphragm valves and their core components is carried out to the **highest quality standards** and using **state-of-the-art processes**.

Our experts are on hand to advise you right from the planning phase, thereby ensuring a high level of process safety and efficiency.

1.2. Quality and precision

In the world of industrial and technological applications, there are countless cases where the precise and controlled flow of liquids and gases is of the utmost importance. This is where diaphragm valves come into play, offering an optimal solution thanks to their innovative designs and outstanding properties.

As a leading supplier of high-quality valve solutions, Goetze presents its well-designed range of diaphragm valves – developed by a specialist team led by J. Hofmann.

The diaphragm valve is an extremely versatile Goetze valve. The product is characterised by its wide range of applications across all industries. The significant advantage of this design is that only two components come into contact with the flow medium: the Shut-off diaphragm and the valve body. The internal geometry in contact with the medium has been designed to minimise flow turbulence as much as possible. Furthermore, there are virtually no areas where the product could accumulate or deposit. Conversely, this also implies excellent cleanability.

Goetze diaphragm valves are characterised by their robust construction, outstanding performance and long service life. They have been developed to function reliably even under demanding conditions and to ensure precise control of the media flow. The valves are manufactured from high-quality materials that meet stringent aseptic requirements, facilitating easy cleaning.

1.3. Goetze Process Test Bench

The Goetze process test bench enables our customers to simulate their own specific production processes and test the valves accordingly. Working alongside Goetze's product specialists, an optimised solution tailored to the customer's requirements can thus be tested in advance under real-world conditions in a reproducible manner.

To obtain repeatable process-based quality verification of the seals used, the individual process steps, such as SIP and/or CIP, can be simulated. To this end, the test bench can be pressurised with various media, such as compressed air, clean steam, vacuum, hot water, cold water, acid, alkali and other cleaning media.

Different production and load sequences can be tested across multiple test runs. The complete sequences are logged and evaluated via a variety of sensors and can subsequently be made available to the customer.

In addition to customer-specific sequences, further tests, such as comprehensive test scenarios described in ASME BPE, are also carried out on the Goetze process test bench.

For example, our diaphrams have already been tested across different nominal diameters using various CIP and SIP cycles.

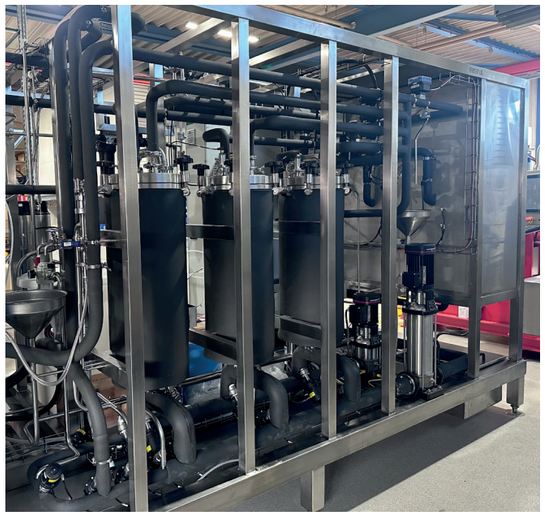

Examples of this include CIP and SIP programmes, as illustrated below:

Programme A

Step I
- System temperature at 25°C
- System pressure at least 3.1 bar
- Total duration 1 hour
- Test report generated if: pressure exceeds 0.0345 bar
- Pressure loss within 1 hour or failure of the diaphragm seal

Step II
- Steam at ≥ 130°C
- Total duration at least 1 h at over 130°C
- Valve switching: 10, 100, 500, 1000 (versatile depending on the measurement section)

Step III
- Cooling of the system with air (at ambient temperature)
- System pressure between 0 and 3.1 bar
- Goal: To achieve a system temperature of 25°C

Step IV
- Repetition of steps II and III
- Adjustable cycles 10, 100, 500, 1000 (versatile depending on the measurement section)

Step V
- System temperature 25°C
- System pressure at least 3.1 bar
- Total time 1 h
- Test report generated if: more than 0.0345 bar
- Pressure loss within 1 h or rupture of the diaphragm seal

Step VI
- Test report generated and test report issued

Programme B

Step I
- Flushing with water for 5 minutes
- System temperature ≤ 40°C
- System pressure at 5 bar (±0.5 bar)
- Valve cycles 15 (10 seconds open, 10 seconds closed, versatile depending on the measurement section)

Step II
- Cleaning with lye for 30 minutes
- System temperature 80°C (±5°C)
- System pressure at 5 bar (±0.5 bar)
- Valve cycles 30 (5 seconds closed, 55 seconds open, versatile depending on the measurement section)

Step III
- Flushing with water for 5 minutes
- System temperature ≤ 40°C
- System pressure at 5 bar (±0.5 bar)
- Valve cycles 15 (10 seconds open, 10 seconds closed, versatile depending on the measurement section)

Step IV
- Cleaning with acid for 30 minutes
- System temperature 80°C (±5°C)
- System pressure at 5 bar (±0.5 bar)
- Valve cycles 30 (5 seconds closed, 55 seconds open, versatile depending on the measurement section)

Step V
- Rinsing with water for 5 minutes
- System temperature ≤ 40°C
- System pressure at 5 bar (±0.5 bar)
- Valve cycles 15 (10 seconds open, 10 seconds closed, versatile depending on the measurement section)

Step VI
- SIP for 30 minutes
- Steam at ≥ 130°C
- Valve cycles 150 (5 seconds open, 5 seconds closed, versatile depending on the measurement section)

Step VII
- Cooling of the system to < 90°C

Step VIII
- Repetition of steps I to VII
- Adjustable cycles 10, 100, 500, 1000 (versatile depending on the measurement section)

1.4. Areas of application

Pharmaceutical production facilities and the associated manufacturing processes are subject to strict validation requirements designed to ensure consistent and reproducible quality. Various regulations and directives, such as GMP or the ISPE Guidelines, serve as a standardised basis for these requirements.

The variety of processes required extends beyond the actual production and generally also includes cleaning, disinfection and sterilisation procedures. When using multi-product systems, which may be employed for reasons of efficiency, the complexity of the processes increases accordingly, which in turn places higher demands on the system and its components.

The challenges arising from managing these diverse processes set high standards for the components used, such as valves or pumps. Even in the development and design phase, criteria such as cleanability, absence of dead space, suitable material selection and operational safety are of crucial importance. Strict quality standards must also be adhered to during the manufacturing phase to ensure the required surface finish at all times.

Important criteria, such as minimal dead space, minimal or no weld seams, and a compact design, must be strictly observed. Further requirements for valves include that they must be self-draining and easy to clean. Ultimately, the entire valve must also be designed to be autoclavable and sterilisable.

- **Pharmaceuticals**

Diaphragm valves are essential in the pharmaceutical industry, as they ensure the highest levels of sterility and precision in processes such as the dosing and mixing of active ingredients, as well as the filling of medicinal products.

They enable precise control over process parameters and contribute to compliance with strict quality standards by protecting against contamination and guaranteeing effective sterilisation.

- **Beverages & Food**

Diaphragm valves are essential in the beverage and food industry for the precise dosing of ingredients and liquids such as flavourings, additives, sauces and dressings. They are used in filling systems for the precise control of liquid flow. Their aseptic design minimises the risk of contamination, thereby ensuring high product quality.

- **Biotech & Life Sciences**

Diaphragm valves play a central role in biotechnological processes such as fermentation, filtration and purification. They enable precise control and sterile handling, for example in the supply of nutrients during fermentation, accurate flow control during filtration and precise dosing during purification. Thanks to their sterile design, they reduce the risk of contamination and meet the high hygiene standards of the biotech industry.

- **Cosmetics**

Diaphragm valves are indispensable in the cosmetics industry, as they ensure precise dosing and mixing in key processes such as the manufacture and filling of creams, lotions and liquids. They enable precise control of the liquid flow, ensuring consistent product quality throughout the process. They are also used in cleaning processes to maintain aseptic conditions in the plant and minimise contamination, contributing to compliance with quality standards in cosmetics manufacturing.

1.5. Certificates

Goetze is certified to the DIN EN ISO 9001:2008 quality standard.

All valves and diaphragms are tested extensively on in-house test benches under conditions that closely resemble real-world use. As the service life of the diaphragms depends on numerous interactions, they are subjected to several static and dynamic tests. An extensive range of test and inspection equipment is available for this purpose, such as a modern steam test bench and a CIP/SIP test bench (CIP: Cleaning in Place / SIP: Sterilisation in Place).

In static tests, the seal integrity across the web and to the outside is usually checked. The seal integrity is tested at maximum operating pressure, and the operating pressure at which the first leaks occur is determined.

Dynamic tests are endurance tests in which the limit values are determined based on the diaphragm material and the diaphagm size (DS). The operating pressure approved and recommended by us for the diaphragm valves is below the pressure at which the valves start to leak. This provides additional safety for your systems. Depending on the application, material and diaphragm size, our shut-off diaphragms can withstand several million switching cycles.

Depending on the diaphragm type and material, additional dynamic tests are carried out under vacuum (70 mbar absolute) and at ambient pressure. Once the diaphragms have passed these internal tests without issue, field tests are conducted at selected customer sites. Only when these also prove successful are the diaphragms approved for final series production and worldwide distribution.

All compounding for Goetze shut-off diaphragms is carried out in accordance with Goetze's specifications. Production also takes place in accordance with strict quality criteria within the Goetze Group or at selected partners with whom we maintain a close and long-standing partnership.

1.6. Reports

The table below provides a basic overview of common certificates and attestations. We recommend that you specify the exact type of certificate and its content before placing your order, so that you can provide the necessary documents. It may be difficult or impossible to issue certificates or attestations retrospectively. Should you have any further questions, our specialists will be happy to assist you.

Overview	
C50	The documentation consists of: Cover sheet, 2.1 Certificate, MPZ 3.1 body, 2.2 pressure rating, EU configuration, proof(s) of diaphragms
C51	The documentation for roughness measurement consists of: Factory certificate 2.2 for roughness in accordance with DIN EN 10204

Factory certificate surface measurement protocol available on request

www.goetze-group.com | info@goetze.de | Telephone: +49 (0) 7141 / 488 94 60
GOETZE

2. OVERVIEW

2.1. Overview of Diaphragm Valves – Types and Designs

A diaphragm valve is a special type of shut-off valve controlled by a flexible diaphragm. The diaphragm, as a moving element, regulates the flow of liquids or gases. The operating principle of a diaphragm valve is widely used in various industrial applications due to its simplicity and efficiency.

The heart of the diaphragm valve is the diaphragm itself. This diaphragm is designed to deform under the influence of pressure changes. The valve essentially consists of an upper actuator section, the diaphragm and a pressure piece, which presses the diaphragm against the sealing lip of the valve body. In doing so, the diaphragm is deformed in such a way that, during the closing process, it is pressed onto the sealing lip with both form-fit and force-fit.

The flow direction can be in any direction.

The choice of diaphragm materials, depending on the medium, is crucial for durability.

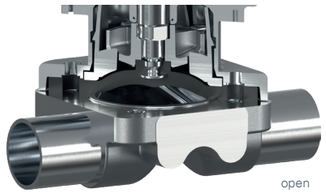

open

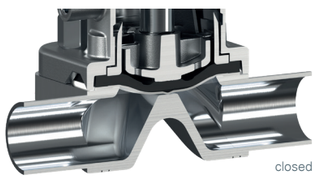

closed

An important criterion for aseptic diaphragm valves is self-draining capability. This property contributes significantly to the use of diaphragm valves in aseptic and Sterile processes. Crucial factors here include the design of the valve body, which must allow it to drain itself.

Further technical requirements include a design with minimal dead space, the presence of minimal or, ideally, no weld seams, and a compact construction. Finally, it must also be ensured that the entire valve can be easily cleaned, autoclaved and sterilised.

Taking customer needs into account

At Goetze, we place great importance on our customers' needs and incorporate them into the development of our diaphragm valves. Our team of experts has taken customer feedback on board and developed technical solutions that offer a wide range of benefits. A key aspect is preventing the loss of bolts and nuts during installation or maintenance, such as when replacing the diaphragm. To simplify system validation and prevent costly errors, we have designed valve systems that do not require complicated angle calculations or varying installation angles depending on the nominal diameter. Our valves are designed so that no manual retightening of the fasteners is required after the first steam sterilisation or system heating, saving both time and money. Furthermore, the design of our valves allows for easy adjustment of the standard closing and stroke limits without removing the handwheel, thereby saving time and costs whilst minimising sources of error. These innovations underline our commitment to bespoke solutions and our dedication to consistently delivering the highest quality and efficiency.

Saves time and money
> No need to install at a specific angle

Unlike previous solutions, Goetze valves do not need to be installed at an angle specified in a table. Vertical installation is sufficient to ensure self-draining. A suitable testing device can be used to assist with this during installation.

The advantage here is obvious and is reflected in simpler and faster assembly.
As it is no longer necessary to adhere to a specific rotation angle – as per extensive tables – this can result in significant savings.

This optimised assembly process during plant installation considerably simplifies both the assembly and validation of the plant.

Furthermore, the vexing issue of lost screws, nuts and washers is a thing of the past thanks to the design featuring Nut locking and the use of special stud bolts. This can lead to significant cost savings, particularly during routine maintenance involving the replacement of the diaphragms.

In day-to-day operations, however, one of the greatest benefits lies in the elimination of the time-consuming and manual – and therefore error-prone – retightening of the four bolts and nuts after the first steam sterilisation or after the system has been heated up.

YOUR BENEFITS / CUSTOMER BENEFITS

- Reduction in total cost of ownership (TCO) with increased plant efficiency (OEE)
- No re-tightening required after steam sterilisation
- Defined diaphragm pressing
- No loose parts, such as fasteners
- The manual valve compensates for the settling behaviour of the elastomer diaphragm. Closing limit is no longer required
- Compact stainless steel actuator in 6 and 10 bar versions
- Simplified system installation thanks to eccentric nozzles
- Adjustment of standard closing and stroke limits without dismantling (handwheel) of the valve
- Modular, integrated valve system

2.2. Goetze Components

Diaphragm valves consist of several components that are fully coordinated with one another. The main individual components of the modular diaphragm valve system are:

- Valve body
- Nozzles
- Shut-off diaphragm
- Actuator

Valve body

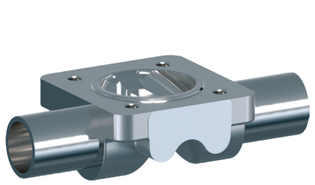
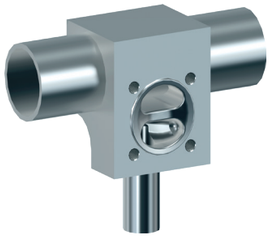

Nozzles

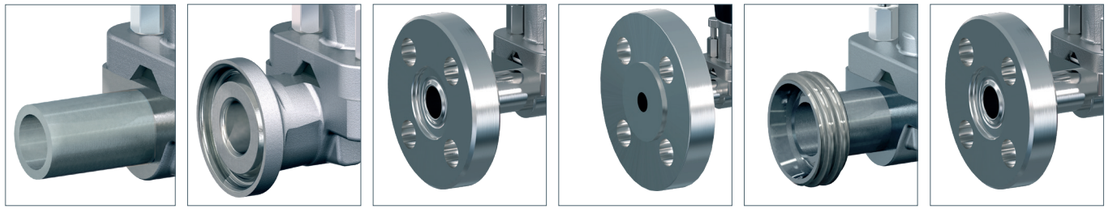

Shut-off diaphragm

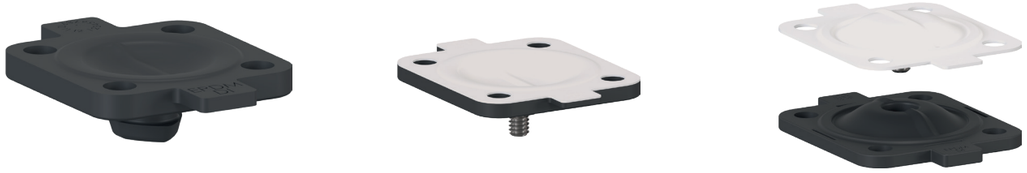

Actuator

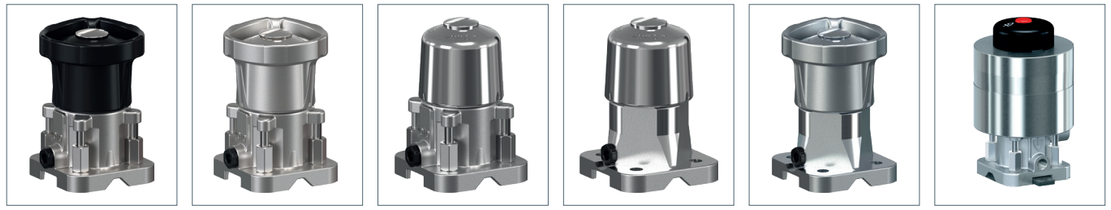

2.3. Model code

Order example for a straight valve body with welded connections

Product groups component	Body variant	Valve body material	Internal surface	Semi-finished product		Connection S01		Connection S02		Seat V01
Diaphragm valve body	Two nozzles, single seat – straightway form	1.4435 BN 2 / 316L	Internal: Ra < 0.8, mechanically polished	Forged body		ASME-BPE (A) DN 015 (015) Standard length (N) Welded connection (W)		ASME-BPE (A) DN 015 (015) Standard length (N) Welded connection (W)		Size DS010
D.B	0201NNN	.3L	.8N	.S	_	A015NW	_	A015NW	_	010

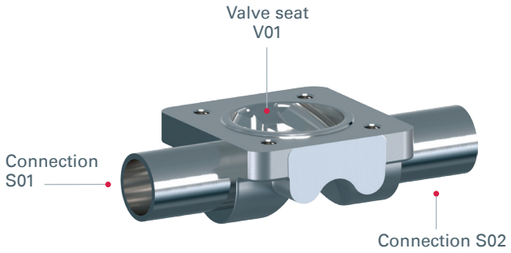

Order example for a 2/2-way valve with pneumatic actuator and weld end

Product groups component	Body variant	Valve body material	Internal surface	Semi-finished product		Connection S01		Connection S02		Seat V01
Diaphragm valve complete valve	Two nozzles, one seat – straightway form	1.4435 BN 2 / 316L	Ra < 0.8; inner surface mechanically polished + inner and outer surfaces electro-polished	Forged body		ASME-BPE (A) DN 015 (015) Standard length (N) Welded end (W)		ASME-BPE (A) DN 015 (015) Standard length (N) Welded end (W)		Diaphragm size DS10 (010), EPDM diaphragm (.E1) Reduced NC pneumatic actuator (spring-to-close) .RNN
D.V	0201NNN	.3L	.8E	.S	_	A015NW	_	A015NW	_	010.E1.RNN

Order example for a 2/2-way valve with Manual actuator and clamps

Product groups component	Body variant	Valve body material	Internal surface	Semi-finished product		Connection S01		Connection S02		Seat V01
Diaphragm valve complete valve	Two nozzles, one seat – straightway form	1.4435 BN 2 / 316L	Internal: Ra ≤ 0.8, mechanically polished	Forged body		ASME-BPE (A) DN 020 (020) Standard length (N) Clamp (A)		ASME-BPE (A) DN 020 (020) Standard length (N) Clamp (A)		Diaphragm size DS15 (015) PTFE/EPDM diaphragm (.FE), Standard manual actuator (.MNN)
D.V	0201NNN	.3L	.8N	.S	_	A020NA	_	A020NA	_	015.FE.MNN

Order example for an EPDM diaphragm in size DS010

Product groups components		Seat V01		Diaphragm material		Index
Diaphragm		Size DS010		EPDM		
D-DI	-	010	-	.E1	-	01

2.4. Technical advice tailored to the customer's needs

Technical advice is not just a priority for our in-house team. We offer our customers support throughout the entire life cycle of the valve and assist those who work with the valves on a daily basis by explaining how they work and providing training. Our field service team is also on hand to provide customers with clear as possible advice and support on all matters relating to our products – reliably and close to the customer.

Mobile website

Our website is also available in a version optimised for smartphones. As always, you can find the products you're looking for quickly and easily – even when you're on the move. Fancy a look? Why not pop in and have a browse...

www.goetze-group.com

Sizing and calculation of safety valves

Using our design programme "Go2Valves", together with the certified discharge coefficient and the minimum flow diameter of our safety valves, it is possible to determine the valve suitable for discharging the required capacity in accordance with AD regulations A2-2000, the international and European standard DIN EN ISO 4126, API 520 and ASME BPVC-VIII.

3D models

We are happy to provide you with data for our 3D models in a range of standard formats to assist with your planning.

TRAINING COURSES

Our team in the 'Technical Training' department offers Goetze customers a range of training courses on diaphragm valves and diaphragm replacement. These courses can be held at any of our sites or on-site at our customers' premises.

3. VALVE BODY

3.1. Description

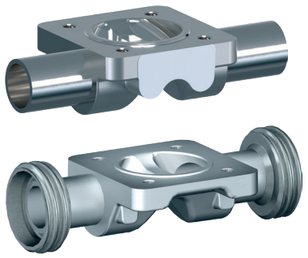

2/2-way straight valve body

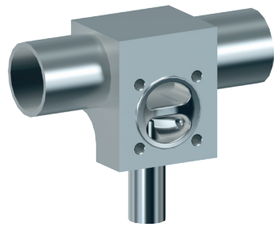

T valve body

Tank bottom valve body

Goetze offers customised valve body solutions to meet a wide range of customer requirements and processes. This enables us to cover all areas of application.

Generally, our valve bodies are manufactured from every conceivable and available material. Materials such as 1.4435 BN2 with a delta-ferrite content of < 0.5 % (316L ASME BPE DT3) are frequently required. Thanks to its many years of experience in valve technology, the manufacture of valve bodies from various Hastelloy materials poses no challenge for Goetze.

It is also necessary to supply valve bodies in accordance with all common Pipe standards and connections. Goetze offers the most common connections and Pipe standards here.

At the same time, Goetze stocks a wide range of valve body variants in its standard range. These range from the most commonly used 2/2-way straight through valves – with Weld ends or various clamps – through welded constructions to highly complex customised valve blocks. Here, several valve functions are combined within a single block. All valve bodies are designed, developed and manufactured in accordance with applicable regulations, such as ASME BPE.

To ensure a consistently high standard of quality, all relevant manufacturing steps are carried out in-house at Goetze.

The Goetze valve body portfolio comprises the following designs:

- 2/2-way straight valve bodies in forged design with all international connection geometries
- T valve bodies
- Tank bottom valve bodies
- Valve blocks
- Welded combinations

3.2. Valve body material and surfaces

Our valve bodies are manufactured as standard from 1.4435 BN2 316L ASME BPE DT3 material. Each body is directly traceable via its melt number and is documented with a 3.1 Inspection certificate.

Other materials are available on request. Depending on the design of the valve body as a 2/2-way straight valve body, forged bodies, solid material bodies or, in selected dimensions, investment-cast bodies are available.

Valve body material	Code
1.4435 BN2 (δ Fe < 0.5%) / 316L ASME BPE DT3 – Forged body	.3L

Other materials available on request.

Our customers benefit from a wide range of surface finish options.

There are various requirements for the surface finish depending on the specific process. The different surface finishes are available in 'mechanically polished' and 'electro-polished' versions. The surface finish can be confirmed by various certificates, such as a 2.2 factory certificate or a 3.1 inspection certificate. Corresponding roughness measurements can be carried out and are documented accordingly.

Surface finish of valve body			
Inner surface[1]	ASME BPE	Hygiene class DIN11866	Code
Ra < 0.76 Internal surface mechanically polished	SF3	H3	.8N
Ra < 0.64 Internal surface mechanically polished + internal and external surfaces electro-polished	SF6	HE3	.8E
Ra < 0.38 Internal surface mechanically polished	SF1	H4	.4N
Ra < 0.38 Internal surface mechanically polished + internal and external surfaces electro-polished	SF4	HE4	.4E
Ra < 0.25 Internal surface mechanically polished + internal and external surfaces electro-polished	-	HE5	.2E

[1] The surface finish of custom valve bodies may be limited in certain cases.

Or any other surface finish with which the Ra value is achieved (in accordance with ASME BPE). The smallest possible Ra value for internal pipe diameters < 6 mm is 0.38 µm. When these surfaces are used, the bodies are marked in accordance with the specifications of ASME BPE . These finishes are only available for valve bodies that are not produced using investment casting (.3L) and are manufactured with connections (A…) in accordance with ASME BPE. Not available for internal diameters < 6 mm. Ra in accordance with DIN EN ISO 4288 and ASME B46.1

Further options available on request.

Valve body surface finishes, internal contour [1]		
	Forged body code .S Solid material code .V	Code
Ra ≤ 0.8 µm (30 µinch) for surfaces in contact with the medium, internally mechanically polished	X	.8N
Ra ≤ 0.8 µm (30 µinch) for surfaces in contact with the medium, internally and externally electro-polished	X	.8E
Ra ≤ 0.4 µm (15 µinch) for surfaces in contact with the medium, mechanically polished internally	X[1]	.4N
Ra ≤ 0.4 µm (15 µinch) for surfaces in contact with the medium, electro-polished internally and externally	X[1]	.4E
Ra ≤ 0.25 µm (10 µinch) for surfaces in contact with the medium, mechanically polished internally	X[1]	.2N
Ra ≤ 0.25 µm (10 µinch) for surfaces in contact with the medium, internally and externally electro-polished	X[1]	.2E

[1] Surface finishes for custom valve bodies may be limited in special cases.

Or any other surface finish that achieves the Ra value (in accordance with ASME BPE). The smallest possible Ra value for internal pipe diameters < 6 mm is 0.38 µm. When these surfaces are used, the bodies are marked in accordance with ASME BPE specifications. These finishes are only available for valve bodies that are not produced using investment casting (.3L) and are manufactured with connections (A…) in accordance with ASME BPE. Not available for internal diameters < 6 mm. Ra in accordance with DIN EN ISO 4288 and ASME B46.1

Further options available on request.

Goetze	DIN 11866	ASME BPE (2014)		
Ra_{ma} µm / µinch	Hygiene class	Ra µm	Designation	Code
≤ 0,76 / 30	H3	≤ 0,76	SF3	.8N
≤ 0,76 / 30	HE3	≤ 0,76	-	.8E
≤ 0,38 / 15	H4	≤ 0,38	SF1, SF2	.4N
≤ 0,38 / 15	HE4	≤ 0,38	SF4, SF5, SF6	.4E
≤ 0,25 / 10	H5	≤ 0,25	-	.2N
≤ 0,25 / 10	HE5	≤ 0,25	-	.2E
≤ 6,3 / 236	-	≤ 6,3	SF0	.63N
≤ 6,3 / 236	-	≤ 6,3	-	.63E

3.3. Connections on the valve body

Goetze diaphragm valves can be supplied in accordance with all standard international pipe standards and connection types.

The pipe connections on the valve bodies can be manufactured to the pipe standards listed in the table below, as standard from DN4 up to DN65. A short connection length and special design are also available as options.

Pipe standard	Code
ASME-BPE/DIN-11866 R-C	A
BS-4825 Part 1	B
ASME-B36.19M Sch. 10s	C
DIN-11866 R-A (11850 R-2)	D
EN-10357 S-B (DIN 11850 R-1)	E
TBV-Weld area	T
EN-10357 S-B (DIN 11850 R-3)	F
Dairy tube	G
ISO-1127 / DIN 11866 R-B	I
JIS-G 3459	J
JIS-G 3447	K
SMS-3008	S

Further information available on request.

Available nominal diameters											
Nominal diameters DN	4	6	8	10	15	20	25	32	40	50	65
	-	-	1/4"	3/8"	1/2"	3/4"	1"	1 1/4"	1 1/2"	2"	2 1/2"
Code	004	006	008	010	015	020	025	032	040	050	065

Length	Code
Standard connection length	N
Short connection length	S
Welding centring connection length	Z

A wide variety of connection options are also available for Goetze diaphragm valves. As standard, the valves are available with weld ends, clamps, or aseptic and dairy pipe threads in accordance with current pipe standards.

Connection	Code
Weld end	W
Clamp ASME Contour	A
Flange with collar DIN 11864-2 Form A	B
Clamp DIN Contour	D
Flange EN 1092, PN 16, Form B, length FTF EN 558 Series 1, ISO 5752, basic series 1	F
Dairy pipe thread	G
Dairy tube, cone nozzle with union nut	K
Flange with groove DIN 11864-2 Form A	N

Further information available on request.

3.4. Body designs

3.4.1. 2/2-way straight valve body

Body variant code: 0201NNN

Application description

2/2-way straight valve bodies are the most commonly used body variants; in sensitive sterile areas, welded connections and clamp connections are the most common connection types. Furthermore, screw connections, sterile flanges and threaded sockets are available.

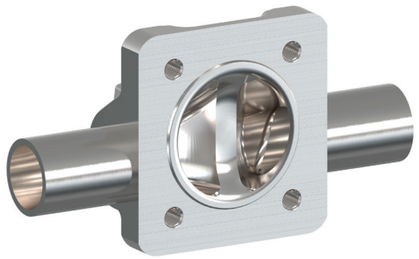

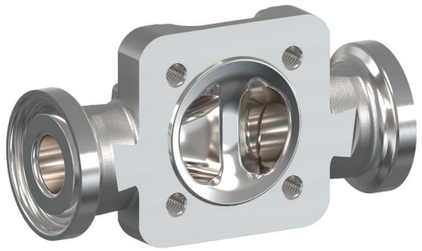

Features

- Valve body materials: 1.4435 BN2 in forged or solid material versions. Other materials available on request.
- Horizontal installation position without any angle of rotation
- Weld ends and clamp connections are available as standard. Other connections, such as aseptic threaded unions, aseptic flanges or aseptic clamps, are available on request.
- Internal surface finishes of the valve body in accordance with ASME BPE and DIN 11866 up to Ra 0.25 µm, as well as mechanically and/or electro-polished
- Compact construction and GMP-compliant design
- Modular system with manual or pneumatic actuators
- Position indicator with simple adaptation

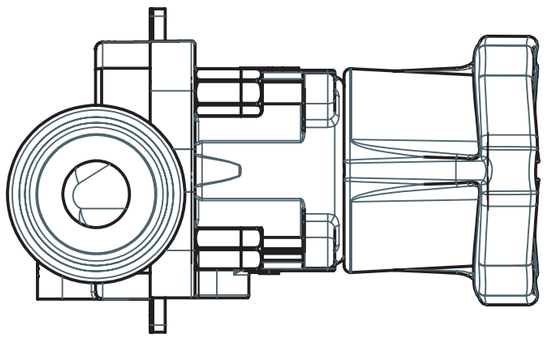

Illustration: Horizontal installation position with nozzles at the bottom; no rotation required.

Body variant code: 0201NNN | Material selection

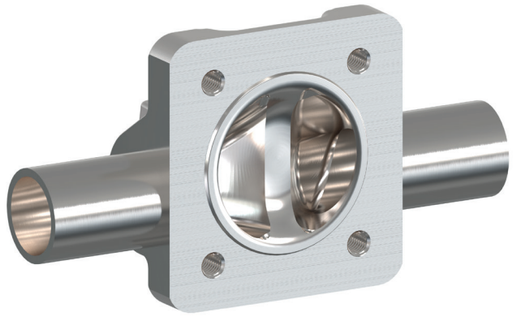

Forging material: .S		
Material code	.3L	1.4435 (316L ASME BPE DT3 / BN2)

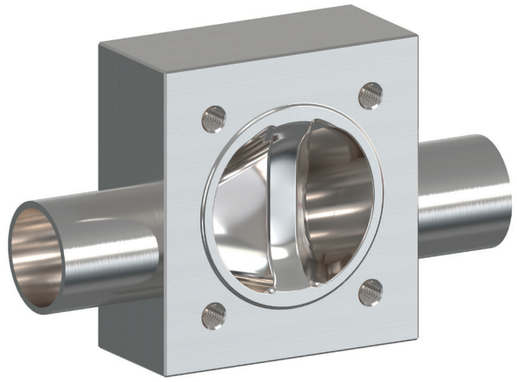

Solid material: .V		
Material code	.3L	1.4435 (316L ASME BPE DT3 / BN2)

2/2-way straight valve body
Weld end

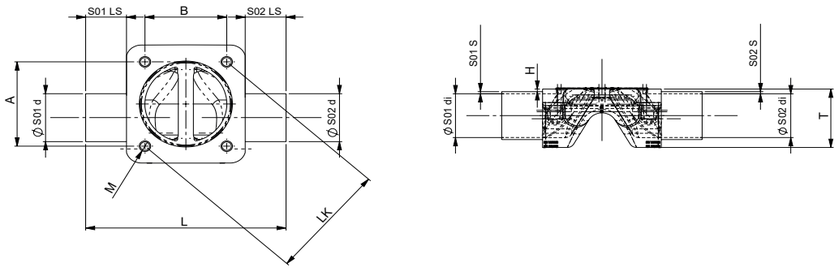

	DS	Pipe S01/S02	S01/ S02	S01/ S02					L	T	H	A x B	M	Kvs [m3/h]	Weight [kg]
				d	S	di	LS	EX							
ASME-BPE/DIN-11866 R-C															
0201NNN.XX.XX.S_A008NW_A008NW_010	010	A008	A008NW	6,35	0,89	4,57	20,00	6,0	76,20	16,50	2,00	22 x 22	M4	0,8	0,12
0201NNN.XX.XX.S_A010NW_A010NW_010	010	A010	A010NW	9,53	0,89	7,75	20,00	4,4	76,20	16,50	2,00	22 x 22	M4	1,6	0,12
0201NNN.XX.XX.S_A015NW_A015NW_010	010	A015	A015NW	12,70	1,65	9,40	20,00	3,6	76,20	16,50	2,00	22 x 22	M4	2,0	0,12
0201NNN.XX.XX.S_A020NW_A020NW_015	015	A020	A020NW	19,05	1,65	15,75	25,00	6,5	103,20	27,00	2,00	37 x 33	M5	3,7	0,26
0201NNN.XX.XX.S_A025NW_A025NW_020	020	A025	A025NW	25,40	1,65	22,10	25,00	7,6	114,40	38,00	2,00	45 x 40	M6	11,8	0,40
0201NNN.XX.XX.S_A025NW_A025NW_025	025	A025	A025NW	25,40	1,65	22,10	25,00	11,6	124,20	40,00	2,00	54 x 46	M8	14,4	0,65
0201NNN.XX.XX.S_A040NW_A040NW_032	032	A040	A040NW	38,10	1,65	34,80	30,00	10,9	147,50	48,00	2,00	67 x 60	M8	28,8	1,00
0201NNN.XX.XX.S_A040NW_A040NW_040	040	A040	A040NW	38,10	1,65	34,80	30,00	13,0	159,00	56,00	2,00	70 x 65	M10	30,1	1,70
0201NNN.XX.XX.S_A050NW_A050NW_040	040	A050	A050NW	50,80	1,65	47,50	30,00	6,7	159,00	56,00	2,00	70 x 65	M10	36,7	1,70
0201NNN.XX.XX.S_A050NW_A050NW_050	050	A050	A050NW	50,80	1,65	47,50	30,00	13,1	177,00	69,00	2,00	82 x 78	M12	51,9	2,80
0201NNN.XX.XX.S_A065NW_A065NW_050	050	A065	A065NW	63,50	1,65	60,20	30,00	6,8	177,00	69,00	2,00	82 x 78	M12	58,6	2,80
DIN-11866 R-A (11850 R-2)															
0201NNN.XX.XX.S_D004NW_D004NW_010	010	D004	D004NW	6,00	1,00	4,00	20,00	6,3	76,20	16,50	2,00	22 x 22	M4	0,6	0,12
0201NNN.XX.XX.S_D006NW_D006NW_010	010	D006	D006NW	8,00	1,00	6,00	20,00	5,3	76,20	16,50	2,00	22 x 22	M4	1,1	0,12
0201NNN.XX.XX.S_D008NW_D008NW_010	010	D008	D008NW	10,00	1,00	8,00	20,00	4,3	76,20	16,50	2,00	22 x 22	M4	1,6	0,12
0201NNN.XX.XX.S_D010NW_D010NW_010	010	D010	D010NW	13,00	1,50	10,00	20,00	3,3	76,20	16,50	2,00	22 x 22	M4	2,1	0,12
0201NNN.XX.XX.S_D015NW_D015NW_015	015	D015	D015NW	19,00	1,50	16,00	25,00	6,4	103,20	27,00	2,00	37 x 33	M5	3,7	0,26
0201NNN.XX.XX.S_D020NW_D020NW_015	015	D020	D020NW	23,00	1,50	20,00	25,00	4,4	103,20	27,00	2,00	37 x 33	M5	4,6	0,26
0201NNN.XX.XX.S_D025NW_D025NW_020	020	D025	D025NW	29,00	1,50	26,00	25,00	5,7	114,40	38,00	2,00	45 x 40	M6	13,8	0,40
0201NNN.XX.XX.S_D025NW_D025NW_025	025	D025	D025NW	29,00	1,50	26,00	25,00	9,7	124,20	40,00	2,00	54 x 46	M8	15,9	0,65
0201NNN.XX.XX.S_D032NW_D032NW_032	032	D032	D032NW	35,00	1,50	32,00	30,00	12,3	147,50	48,00	2,00	67 x 60	M8	26,1	1,00
0201NNN.XX.XX.S_D040NW_D040NW_040	040	D040	D040NW	41,00	1,50	38,00	30,00	11,4	159,00	56,00	2,00	70 x 65	M10	31,8	1,70
D.B0201NNN.XX.XX.S_D050NW_D050NW_050	050	D050	D050NW	53,00	1,50	50,00	30,00	11,9	177,00	69,00	2,00	82 x 78	M12	53,2	2,80
ISO-1127 / DIN 11866 R-B															
0201NNN.XX.XX.S_I008NW_I008NW_010	010	I008	I008NW	13,50	1,60	10,30	20,00	3,1	76,20	16,50	2,00	22 x 22	M4	2,2	0,12
0201NNN.XX.XX.S_I010NW_I010NW_015	015	I010	I010NW	17,20	1,60	14,00	25,00	7,4	103,20	27,00	2,00	37 x 33	M5	3,3	0,26
0201NNN.XX.XX.S_I015NW_I015NW_015	015	I015	I015NW	21,30	1,60	18,10	25,00	5,3	103,20	27,00	2,00	37 x 33	M5	4,2	0,26
0201NNN.XX.XX.S_I020NW_I020NW_020	020	I020	I020NW	26,90	1,60	23,70	25,00	6,8	114,40	38,00	2,00	45 x 40	M6	12,6	0,40
0201NNN.XX.XX.S_I025NW_I025NW_025	025	I025	I025NW	33,70	2,00	29,70	25,00	7,8	124,20	40,00	2,00	54 x 46	M8	17,3	0,65
0201NNN.XX.XX.S_I032NW_I032NW_032	032	I032	I032NW	42,40	2,00	38,40	30,00	9,1	147,50	48,00	2,00	67 x 60	M8	32,2	1,00
0201NNN.XX.XX.S_I040NW_I040NW_040	040	I040	I040NW	48,30	2,00	44,30	30,00	8,3	159,00	56,00	2,00	70 x 65	M10	35,0	1,70
0201NNN.XX.XX.S_I050NW_I050NW_050	050	I050	I050NW	60,30	2,00	56,30	30,00	8,7	177,00	69,00	2,00	82 x 78	M12	56,5	2,80

Note: Bodies used as spare parts / components begin with the code D.B.

2/2-way straight valve body
Weld end

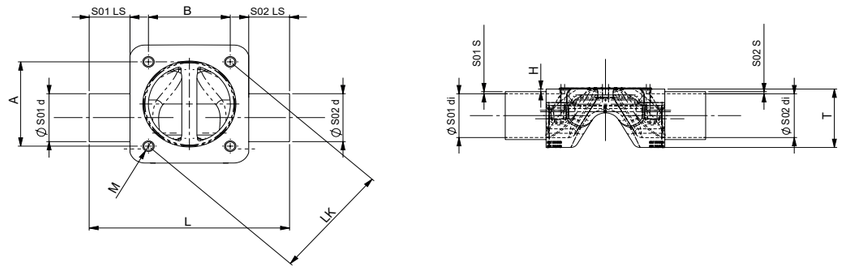

	DS	Pipe S01/S02	S01/ S02	S01/ S02					L	T	H	A x B	M	Kvs [m3/h]	Weight [kg]
				d	S	di	LS	EX							
SMS-3008															
0201NNN.XX.XX.S_S025NW_S025NW_020	020	S025	S025NW	25,00	1,20	22,60	25,00	7,4	114,40	38,00	2,00	45 x 40	M6	12,1	0,40
0201NNN.XX.XX.S_S025NW_S025NW_025	025	S025	S025NW	25,00	1,20	22,60	25,00	11,4	124,20	40,00	2,00	54 x 46	M8	14,6	0,65
0201NNN.XX.XX.S_S032NW_S032NW_025	025	S032	S032NW	33,70	1,20	31,30	30,00	7,0	134,20	40,00	2,00	54 x 46	M8	17,9	0,65
0201NNN.XX.XX.S_S032NW_S032NW_032	032	S032	S032NW	33,70	1,20	31,30	30,00	12,7	147,50	48,00	2,00	67 x 60	M8	25,4	1,00
0201NNN.XX.XX.S_S040NW_S040NW_032	032	S040	S040NW	38,00	1,20	35,60	30,00	10,5	147,50	48,00	2,00	67 x 60	M8	29,5	1,00
0201NNN.XX.XX.S_S040NW_S040NW_040	040	S040	S040NW	38,00	1,20	35,60	30,00	12,6	159,00	56,00	2,00	70 x 65	M10	30,5	1,70
0201NNN.XX.XX.S_S050NW_S050NW_040	040	S050	S050NW	51,00	1,20	48,60	30,00	6,1	159,00	56,00	2,00	70 x 65	M10	37,2	1,70
0201NNN.XX.XX.S_S050NW_S050NW_050	050	S050	S050NW	51,00	1,20	48,60	30,00	12,6	177,00	69,00	2,00	82 x 78	M12	52,4	2,80
0201NNN.XX.XX.S_S065NW_S065NW_050	050	S065	S065NW	63,50	1,60	60,30	30,00	6,7	177,00	69,00	2,00	82 x 78	M12	58,6	2,80
BS-4825 Part 1															
0201NNN.XX.XX.S_B008NW_B008NW_010	010	B008	B008NW	6,35	1,20	3,95	20,00	6,3	76,20	16,50	2,00	22 x 22	M4	0,6	0,12
0201NNN.XX.XX.S_B010NW_B010NW_010	010	B010	B010NW	9,53	1,20	7,13	20,00	4,7	76,20	16,50	2,00	22 x 22	M4	1,4	0,12
0201NNN.XX.XX.S_B015NW_B015NW_010	010	B015	B015NW	12,70	1,20	10,30	20,00	3,1	76,20	16,50	2,00	22 x 22	M4	2,2	0,12
0201NNN.XX.XX.S_B020NW_B020NW_015	015	B020	B020NW	19,05	1,20	16,65	25,00	6,0	103,20	27,00	2,00	37 x 33	M5	3,9	0,26
ASME-B36.19M Sch. 10s															
0201NNN.XX.XX.S_C008NW_C008NW_010	010	C008	C008NW	13,70	1,65	10,40	20,00	3,1	76,20	16,50	2,00	22 x 22	M4	2,2	0,12
0201NNN.XX.XX.S_C010NW_C010NW_015	015	C010	C010NW	17,10	1,65	13,80	25,00	7,5	103,20	27,00	2,00	37 x 33	M5	3,3	0,26
0201NNN.XX.XX.S_C015NW_C015NW_015	015	C015	C015NW	21,30	2,11	17,08	25,00	5,8	103,20	27,00	2,00	37 x 33	M5	4,0	0,26
0201NNN.XX.XX.S_C020NW_C020NW_020	020	C020	C020NW	26,70	2,11	22,48	25,00	7,4	114,40	38,00	2,00	45 x 40	M6	12,0	0,40
0201NNN.XX.XX.S_C025NW_C025NW_025	025	C025	C025NW	33,40	2,77	27,86	25,00	8,7	124,20	40,00	2,00	54 x 46	M8	16,6	0,65
0201NNN.XX.XX.S_C032NW_C032NW_032	032	C032	C032NW	42,20	2,77	36,66	30,00	10,0	147,50	48,00	2,00	67 x 60	M8	30,5	1,00
0201NNN.XX.XX.S_C040NW_C040NW_040	040	C040	C040NW	48,30	2,77	42,76	30,00	9,0	159,00	56,00	2,00	70 x 65	M10	34,2	1,70
0201NNN.XX.XX.S_C050NW_C050NW_050	050	C050	C050NW	60,30	2,77	54,76	30,00	9,5	177,00	69,00	2,00	82 x 78	M12	55,7	2,80
EN-10357 S-B (DIN 11850 R-1)															
0201NNN.XX.XX.S_E010NW_E010NW_010	010	E010	E010NW	12,00	1,00	10,00	20,00	3,3	76,20	16,50	2,00	22 x 22	M4	2,1	0,12
0201NNN.XX.XX.S_E015NW_E015NW_015	015	E015	E015NW	18,00	1,00	16,00	25,00	6,4	103,20	27,00	2,00	37 x 33	M5	3,7	0,26
0201NNN.XX.XX.S_E020NW_E020NW_015	015	E020	E020NW	22,00	1,00	20,00	25,00	4,4	103,20	27,00	2,00	37 x 33	M5	4,6	0,26
0201NNN.XX.XX.S_E025NW_E025NW_020	020	E025	E025NW	28,00	1,00	26,00	25,00	5,7	114,40	38,00	2,00	45 x 40	M6	13,8	0,40
0201NNN.XX.XX.S_E025NW_E025NW_025	025	E025	E025NW	28,00	1,00	26,00	25,00	9,7	124,20	40,00	2,00	54 x 46	M8	15,9	0,65
0201NNN.XX.XX.S_E032NW_E032NW_032	032	E032	E032NW	34,00	1,00	32,00	30,00	12,3	147,50	48,00	2,00	67 x 60	M8	26,1	1,00
0201NNN.XX.XX.S_E040NW_E040NW_040	040	E040	E040NW	40,00	1,00	38,00	30,00	11,4	159,00	56,00	2,00	70 x 65	M10	31,8	1,70
0201NNN.XX.XX.S_E050NW_E050NW_050	050	E050	E050NW	52,00	1,00	50,00	30,00	11,9	177,00	69,00	2,00	82 x 78	M12	53,2	2,80

Note: Bodies used as spare parts / components begin with the code D.B.

2/2-way straight valve body
Weld end

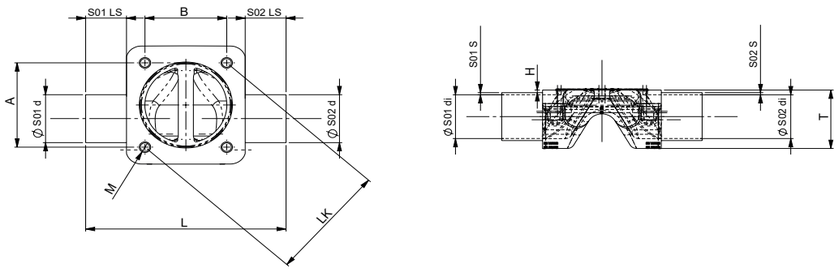

	DS	Pipe S01/S02	S01/ S02	S01/ S02					L	T	H	A x B	M	Kvs [m3/h]	Weight [kg]
				d	S	di	LS	EX							
EN-10357 S-B (DIN 11850 R-3)															
0201NNN.XX.XX.S_F010NW_F010NW_010	010	F010	F010NW	14,00	2,00	10,00	20,00	3,3	76,20	16,50	2,00	22 x 22	M4	2,1	0,12
0201NNN.XX.XX.S_F015NW_F015NW_015	015	F015	F015NW	20,00	2,00	16,00	25,00	6,4	103,20	27,00	2,00	37 x 33	M5	3,7	0,26
0201NNN.XX.XX.S_F020NW_F020NW_015	015	F020	F020NW	24,00	2,00	20,00	25,00	4,4	103,20	27,00	2,00	37 x 33	M5	4,6	0,26
0201NNN.XX.XX.S_F025NW_F025NW_020	020	F025	F025NW	30,00	2,00	26,00	25,00	5,7	114,40	38,00	2,00	45 x 40	M6	13,8	0,40
0201NNN.XX.XX.S_F025NW_F025NW_025	025	F025	F025NW	30,00	2,00	26,00	25,00	9,7	124,20	40,00	2,00	54 x 46	M8	15,9	0,65
0201NNN.XX.XX.S_F032NW_F032NW_032	032	F032	F032NW	36,00	2,00	32,00	30,00	12,3	147,50	48,00	2,00	67 x 60	M8	26,1	1,00
0201NNN.XX.XX.S_F040NW_F040NW_040	040	F040	F040NW	42,00	2,00	38,00	30,00	11,4	159,00	56,00	2,00	70 x 65	M10	31,8	1,70
0201NNN.XX.XX.S_F050NW_F050NW_050	050	F050	F050NW	54,00	2,00	50,00	30,00	11,9	177,00	69,00	2,00	82 x 78	M12	53,2	2,80
Milchrohr															
0201NNN.XX.XX.S_G015NW_G015NW_015	015	G015	G015NW	18,00	1,50	15,00	25,00	6,9	103,20	27,00	2,00	37 x 33	M5	3,5	0,26
0201NNN.XX.XX.S_G020NW_G020NW_015	015	G020	G020NW	22,00	1,50	19,00	25,00	4,9	103,20	27,00	2,00	37 x 33	M5	4,4	0,26
0201NNN.XX.XX.S_G025NW_G025NW_020	020	G025	G025NW	28,00	1,50	25,00	25,00	6,2	114,40	38,00	2,00	45 x 40	M6	13,3	0,40
0201NNN.XX.XX.S_G025NW_G025NW_025	025	G025	G025NW	28,00	1,50	25,00	25,00	10,2	124,20	40,00	2,00	54 x 46	M8	15,5	0,65
0201NNN.XX.XX.S_G032NW_G032NW_032	032	G032	G032NW	34,00	1,50	31,00	30,00	12,8	147,50	48,00	2,00	67 x 60	M8	25,2	1,00
0201NNN.XX.XX.S_G040NW_G040NW_040	040	G040	G040NW	40,00	1,50	37,00	30,00	11,9	159,00	56,00	2,00	70 x 65	M10	31,2	1,70
0201NNN.XX.XX.S_G050NW_G050NW_050	050	G050	G050NW	52,00	1,50	49,00	30,00	12,4	177,00	69,00	2,00	82 x 78	M12	52,6	2,80
JIS-G 3459															
0201NNN.XX.XX.S_J008NW_J008NW_010	010	J008	J008NW	13,80	1,65	10,50	20,00	3,0	76,20	16,50	2,00	22 x 22	M4	2,2	0,12
0201NNN.XX.XX.S_J010NW_J010NW_015	015	J010	J010NW	17,30	1,65	14,00	25,00	7,4	103,20	27,00	2,00	37 x 33	M5	3,3	0,26
0201NNN.XX.XX.S_J015NW_J015NW_015	015	J015	J015NW	21,70	2,10	17,50	25,00	5,6	103,20	27,00	2,00	37 x 33	M5	4,1	0,26
0201NNN.XX.XX.S_J020NW_J020NW_020	020	J020	J020NW	27,20	2,10	23,00	25,00	7,2	114,40	38,00	2,00	45 x 40	M6	12,3	0,40
0201NNN.XX.XX.S_J025NW_J025NW_025	025	J025	J025NW	34,00	2,80	28,40	25,00	8,5	124,20	40,00	2,00	54 x 46	M8	16,8	0,65
0201NNN.XX.XX.S_J032NW_J032NW_032	032	J032	J032NW	42,70	2,80	37,10	30,00	9,8	147,50	48,00	2,00	67 x 60	M8	30,9	1,00
0201NNN.XX.XX.S_J040NW_J040NW_040	040	J040	J040NW	48,60	2,80	43,00	30,00	8,9	159,00	56,00	2,00	70 x 65	M10	34,3	1,70
0201NNN.XX.XX.S_J050NW_J050NW_050	050	J050	J050NW	60,50	2,80	54,90	30,00	9,4	177,00	69,00	2,00	82 x 78	M12	55,8	2,80
JIS-G 3447															
0201NNN.XX.XX.S_K025NW_K025NW_025	025	K025	K025NW	25,40	1,20	23,00	25,00	11,2	124,20	40,00	2,00	54 x 46	M8	14,8	0,65
0201NNN.XX.XX.S_K040NW_K040NW_040	040	K040	K040NW	38,10	1,20	35,70	30,00	12,6	159,00	56,00	2,00	70 x 65	M10	30,6	1,70
0201NNN.XX.XX.S_K050NW_K050NW_050	050	K050	K050NW	50,80	1,50	47,80	30,00	13,0	177,00	69,00	2,00	82 x 78	M12	52,0	2,80

Note: Bodies used as spare parts / components begin with the code D.B.

2/2-way straight valve body
Clamp body

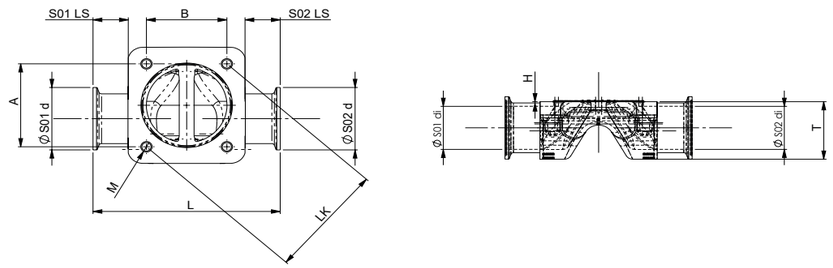

	DS	Pipe S01/S02	S01/ S02	S01/ S02					L	T	H	A x B	M	Kvs [m3/h]	Weight [kg]
				d	S	di	LS	EX							
ASME-BPE/DIN-11866 R-C															
0201NNN.XX.XX.S_A008NA_A008NA_010	010	A008	A008NA	25,00	10,22	4,56	13,65	6,0	63,50	16,50	2,00	22 x 22	M4	0,8	0,12
0201NNN.XX.XX.S_A008NA_A008NA_010	010	A010	A010NA	25,00	8,62	7,75	13,65	4,4	63,50	16,50	2,00	22 x 22	M4	1,6	0,12
0201NNN.XX.XX.S_A008NA_A008NA_010	010	A015	A015NA	25,00	7,80	9,40	13,65	3,6	63,50	16,50	2,00	22 x 22	M4	2,0	0,12
0201NNN.XX.XX.S_A008NA_A008NA_015	015	A020	A020NA	25,00	4,62	15,75	24,20	6,5	101,60	27,00	2,00	37 x 33	M5	3,7	0,26
0201NNN.XX.XX.S_A008NA_A008NA_020	020	A020	A020NA	25,00	4,62	15,75	18,60	10,8	101,60	38,00	2,00	45 x 40	M6	8,6	0,40
0201NNN.XX.XX.S_A008NA_A008NA_020	020	A025	A025NA	50,50	14,20	22,10	24,95	7,6	114,30	38,00	2,00	45 x 40	M6	11,8	0,40
0201NNN.XX.XX.S_A008NA_A008NA_025	025	A025	A025NA	50,50	14,20	22,10	20,05	11,6	114,30	40,00	2,00	54 x 46	M8	14,4	0,65
0201NNN.XX.XX.S_A008NA_A008NA_032	032	A040	A040NA	50,50	7,85	34,80	26,10	10,9	139,70	48,00	2,00	67 x 60	M8	28,8	1,00
0201NNN.XX.XX.S_A008NA_A008NA_040	040	A040	A040NA	50,50	7,85	34,80	20,35	13,0	139,70	56,00	2,00	70 x 65	M10	30,1	1,70
0201NNN.XX.XX.S_A008NA_A008NA_040	040	A050	A050NA	64,00	8,25	47,50	29,90	6,7	158,80	56,00	2,00	70 x 65	M10	36,7	1,70
0201NNN.XX.XX.S_A008NA_A008NA_050	050	A050	A050NA	64,00	8,25	47,50	20,90	13,1	158,80	69,00	2,00	82 x 78	M12	51,9	2,80
0201NNN.XX.XX.S_A008NA_A008NA_050	050	A065	A065NA	77,50	8,65	60,20	38,40	6,8	193,80	69,00	2,00	82 x 78	M12	58,6	2,80
DIN-11866 R-A (11850 R-2)															
0201NNN.XX.XX.S_D006ND_D006ND_010	010	D006	D006ND	25,00	9,50	6,00	13,65	5,3	63,50	16,50	2,00	22 x 22	M4	1,1	0,12
0201NNN.XX.XX.S_D006ND_D006ND_010	010	D008	D008ND	25,00	8,50	8,00	13,65	4,3	63,50	16,50	2,00	22 x 22	M4	1,6	0,12
0201NNN.XX.XX.S_D006ND_D006ND_010	010	D010	D010ND	34,00	12,00	10,00	13,65	3,3	63,50	16,50	2,00	22 x 22	M4	2,1	0,12
0201NNN.XX.XX.S_D006ND_D006ND_015	015	D015	D015ND	34,00	9,00	16,00	27,40	6,4	108,00	27,00	2,00	37 x 33	M5	3,7	0,26
0201NNN.XX.XX.S_D006ND_D006ND_020	020	D020	D020ND	34,00	7,00	20,00	26,30	8,7	117,00	38,00	2,00	45 x 40	M6	10,8	0,40
0201NNN.XX.XX.S_D006ND_D006ND_020	020	D025	D025ND	50,50	12,75	25,00	26,30	5,7	117,00	38,00	2,00	45 x 40	M6	13,3	0,40
0201NNN.XX.XX.S_D006ND_D006ND_025	025	D025	D025ND	50,50	12,75	25,00	26,40	9,7	127,00	40,00	2,00	54 x 46	M8	15,5	0,65
0201NNN.XX.XX.S_D006ND_D006ND_025	025	D032	D032ND	50,50	9,25	32,00	26,40	6,7	127,00	40,00	2,00	54 x 46	M8	18,2	0,65
0201NNN.XX.XX.S_D006ND_D006ND_032	032	D032	D032ND	50,50	9,25	32,00	29,25	12,3	146,00	48,00	2,00	67 x 60	M8	26,1	1,00
0201NNN.XX.XX.S_D006ND_D006ND_032	032	D040	D040ND	50,50	6,25	38,00	29,25	9,3	146,00	48,00	2,00	67 x 60	M8	31,8	1,00
0201NNN.XX.XX.S_D006ND_D006ND_040	040	D040	D040ND	50,50	6,25	38,00	30,00	11,4	159,00	56,00	2,00	70 x 65	M10	31,8	1,70
0201NNN.XX.XX.S_D006ND_D006ND_040	040	D050	D050ND	64,00	7,00	50,00	30,00	5,4	159,00	56,00	2,00	70 x 65	M10	37,9	1,70
0201NNN.XX.XX.S_D006ND_D006ND_050	050	D050	D050ND	64,00	7,00	50,00	36,50	11,9	190,00	69,00	2,00	82 x 78	M12	53,2	2,80
0201NNN.XX.XX.S_D006ND_D006ND_050	050	D065	D065ND	91,00	13,00	65,00	36,50	3,9	190,00	69,00	2,00	82 x 78	M12	61,1	2,80

Note: Bodies used as spare parts / components begin with the code D.B.

2/2-way straight valve body
Clamp body

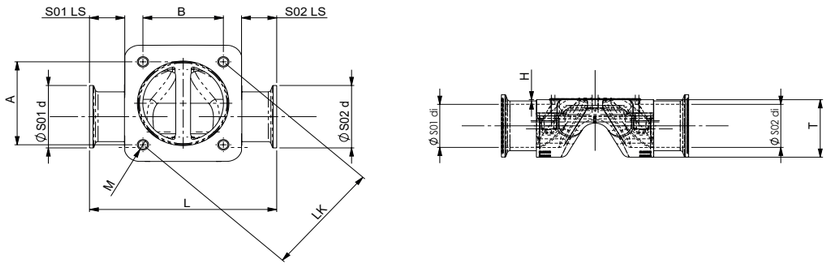

	DS	Pipe S01/S02	S01/ S02	S01/ S02					L	T	H	A x B	M	Kvs [m3/h]	Weight [kg]
				d	S	di	LS	EX							
ISO-1127 / DIN 11866 R-B															
0201NNN.XX.XX.S_I008NA_I008NA_010	010	I008	I008NA	25,00	7,35	10,30	13,65	3,1	63,50	16,50	2,00	22 x 22	M4	2,2	0,12
0201NNN.XX.XX.S_I008NA_I008NA_015	015	I010	I010NA	25,00	5,50	14,00	27,40	7,4	108,00	27,00	2,00	37 x 33	M5	3,3	0,26
0201NNN.XX.XX.S_I008NA_I008NA_015	015	I015	I015NA	50,50	16,20	18,10	27,40	5,3	108,00	27,00	2,00	37 x 33	M5	4,2	0,26
0201NNN.XX.XX.S_I008NA_I008NA_020	020	I020	I020NA	50,50	13,40	23,70	26,30	6,8	117,00	38,00	2,00	45 x 40	M6	12,6	0,40
0201NNN.XX.XX.S_I008NA_I008NA_025	025	I025	I025NA	50,50	10,40	29,70	26,40	7,8	127,00	40,00	2,00	54 x 46	M8	17,3	0,65
0201NNN.XX.XX.S_I008NA_I008NA_032	032	I032	I032NA	64,00	12,80	38,40	29,25	9,1	146,00	48,00	2,00	67 x 60	M8	32,2	1,00
0201NNN.XX.XX.S_I008NA_I008NA_040	040	I040	I040NA	64,00	9,85	44,30	30,00	8,3	159,00	56,00	2,00	70 x 65	M10	35,0	1,70
0201NNN.XX.XX.S_I008NA_I008NA_050	050	I050	I050NA	77,50	10,60	56,30	36,50	8,7	190,00	69,00	2,00	82 x 78	M12	56,5	2,80
SMS-3008															
0201NNN.XX.XX.S_S025NA_S025NA_020	020	S025	S025NA	50,50	13,95	22,60	26,30	7,4	117,00	38,00	2,00	45 x 40	M6	12,1	0,40
0201NNN.XX.XX.S_S025NA_S025NA_025	025	S025	S025NA	50,50	13,95	22,60	26,40	11,4	127,00	40,00	2,00	54 x 46	M8	14,6	0,65
0201NNN.XX.XX.S_S025NA_S025NA_025	025	S032	S032NA	50,50	9,60	31,30	26,40	7,0	127,00	40,00	2,00	54 x 46	M8	17,9	0,65
0201NNN.XX.XX.S_S025NA_S025NA_032	032	S032	S032NA	50,50	9,60	31,30	29,25	12,7	146,00	48,00	2,00	67 x 60	M8	25,4	1,00
0201NNN.XX.XX.S_S025NA_S025NA_032	032	S040	S040NA	50,50	7,45	35,60	29,25	10,5	146,00	48,00	2,00	67 x 60	M8	29,5	1,00
0201NNN.XX.XX.S_S025NA_S025NA_040	040	S040	S040NA	50,50	7,45	35,60	30,00	12,6	159,00	56,00	2,00	70 x 65	M10	30,5	1,70
0201NNN.XX.XX.S_S025NA_S025NA_040	040	S050	S050NA	64,00	7,70	48,60	30,00	6,1	159,00	56,00	2,00	70 x 65	M10	37,2	1,70
0201NNN.XX.XX.S_S025NA_S025NA_050	050	S050	S050NA	64,00	7,70	48,60	36,50	12,6	190,00	69,00	2,00	82 x 78	M12	52,4	2,80
0201NNN.XX.XX.S_S025NA_S025NA_050	050	S065	S065NA	77,50	8,60	60,30	36,50	6,7	190,00	69,00	2,00	82 x 78	M12	58,6	2,80

Note: Bodies used as spare parts / components begin with the code D.B.

Kv values

The Kv value (Cv value) refers to the water flow rate in m³/h (US gallons/min) at a temperature between 5°C and 40°C (40°F and 100°F) and a differential pressure Δp of 1 bar (1 psi) between the inlet and outlet of the valve at a specified stroke. The Kv and Cv values are related to each other by the ratio Kv = 0.865 · Cv.

The Kv value is therefore ideal for comparing various types of valves and fittings in different designs in terms of their flow rate. This parameter is also frequently used in the calculation and planning of systems.

At maximum stroke (H = 100%) of the valve, the Kv value is referred to as the Kvs value (Cvs value) of the valve.

The following table shows the Kv value for 2/2-way straight through valves of body variant 0201NNN.

For further values, see data sheet D.V0201NNN

Welded sockets in accordance with pipe standards							
Diaphragm size	DN	Size	ASME-BPE/ DIN-11866 R-C Kvs [m³/h]	DIN-11866 R-A (11850 R-2) Kvs [m³/h]	ISO-1127 / DIN 11866 R-B Kvs [m³/h]	SMS-3008 Kvs [m³/h]	EN-10357 S-B (DIN 11850 R-1) Kvs [m³/h]
DS010	4	-	0,5	-	-	-	-
	6	-	1,1	-	-	-	1,2
	8	1/4"	1,3	-	-	-	2,2
	10	3/8"	-	2,1	2,1	2,1	-
	15	1/2"	-	-	-	-	-
DS015	10	3/8"	-	2,4	2,4	2,4	3,3
	15	1/2"	3,3	3,8	3,8	3,8	4
	20	3/4"	-	-	-	-	-
DS020 DS025	15	1/2"	4,1	4,7	4,7	4,7	7,4
	20	3/4"	6,3	7	7	7	13,2
	25	1"	13,9	15	15	15	16,2
DS032 DS040	32	1¼"	25,3	27	27	27	26,2
	40	1½"	29,3	30,9	30,9	30,9	30,2
DS50	50	2"	46,5	48,4	48,4	48,4	51,7

Notes:
For pipes conforming to the BS4825 standard, the Kvs values are the same as or slightly higher than those for the ASME BPE pipe standard, due to the almost identical internal pipe diameters. For the JIS-G 3459 pipe standard, the Kvs values are the same as or slightly lower than those for the EN ISO 1127 pipe standard, due to the almost identical internal pipe diameters. As the Kvs values were determined using an .E1 (EPDM) diaphragm, the Kvs values for diaphragms made of PTFE may be lower due to the higher stiffness of the material. It should also be noted that the operating pressure influences the Kvs value.

Order example for a straight valve body with welded connections

Product groups component	Body variant	Valve body material	Internal surface	Semi-finished product		Connection S01		Connection S02		Seat V01
Diaphragm valve body	Two nozzles, single seat – straightway form	1.4435 BN 2 / 316L	internal: Ra < 0.8, mechanically polished	Forged body		ASME-BPE (A) DN 015 (015) Standard length (N) Welded connection (W)		ASME-BPE (A) DN 015 (015) Standard length (N) Welded connection (W)		Size DS010
D.B	0201NNN	.3L	.8N	.S	_	A015NW	_	A015NW	_	010

3.4.2. T valve body

T valve bodies are ideally suited for feeding and/or extracting media without dead space. Goetze T valve bodies are manufactured from high-quality solid material and therefore have no weld seams in the areas in contact with the medium, thereby reducing the validation effort required.

For example, T valve bodies are used for sampling from large ring mains, whereby such a solution minimises the dead space ratio.

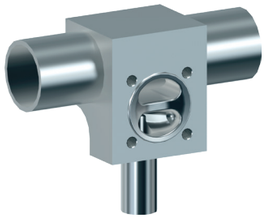

Features

- Valve body materials: 1.4435 BN2 in solid material construction.
  Other special materials available on request.
- No weld seams
- Connections such as Weld ends, clamps, aseptic threaded unions, aseptic flanges or aseptic clamps are fitted in accordance with the customer's requirements and specifications
- Internal surface finishes of the valve body in accordance with ASME BPE and DIN 11866 up to Ra 0.25 µm, as well as mechanically and/or electro-polished
- Compact construction and GMP-compliant design
- Modular system with manual or pneumatic actuators
- Position indicator and valve connection with simple adaptation

Body variant code: 0301TNL
Material selection

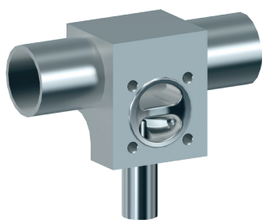

Solid material: .V		
Material code	.3L	1.4435 (316L ASME BPE DT3 / BN2)

Special materials available on request.

Body variant code: 0301TNL
Pipe standard code:
A, for pipes in accordance with ASME-BPE / DIN 11866 R-C
Length code: N, standard overall length

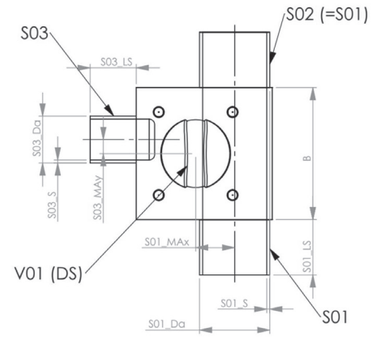

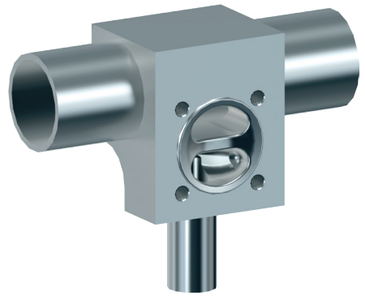

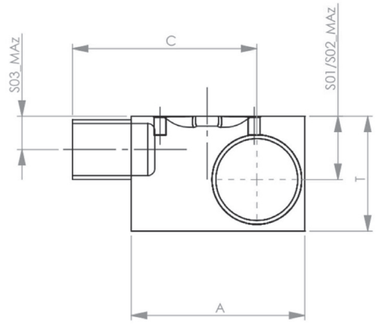

EN ISO 1127, Code I									
DS	DN	NPS	Code	L (mm)	LS (mm)	H (mm)	Ød (mm)	s (mm)	AxB / Ø LK (mm)
010	8		D.B0201NNN.XX.XX.X_I008NW_I008NW_010	76	20	2	13,5	1,6	22 x 22
015	10 15		D.B0201NNN.XX.XX.X_I010NW_I010NW_015 D.B0201NNN.XX.XX.X_I015NW_I015NW_015	103	25	2	17,2 21,3	1,6 1,6	37 x 33
020	20		D.B0201NNN.XX.XX.X_I020NW_I020NW_020	114	25	2	26,9	1,6	45 x 40
025	20 25		D.B0201NNN.XX.XX.X_I020NW_I020NW_025 D.B0201NNN.XX.XX.X_I025NW_I025NW_025	124	25	2	26,9 33,7	1,6 2,0	54 x 46
032	32		D.B0201NNN.XX.XX.X_I032NW_I032NW_032	147	25	2	42,4	2,0	67 x 60
040	40		D.B0201NNN.XX.XX.X_I040NW_I040NW_040	159	25	2	42,4 48,3	2,0 2,0	70 x 65
050	50		D.B0201NNN.XX.XX.X_I050NW_I050NW_050	177	30	2	60,3	2,0	82 x 78

DS: Diaphragm Size

Body variant code: 0301TNL

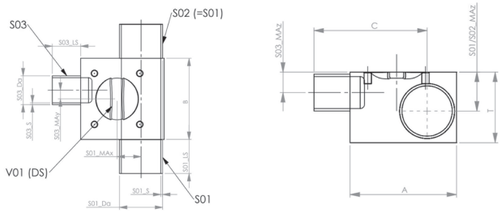

	S01/ S02					S03					A	B	T	Max	Weight [kg]
	Da	S	LS	Max	C	Da	S	LS	Max	C					
ASME-BPE/DIN-11866 R-C															
0301TNL.XX.XX.V_A008NW_A008NW_A008NW_010	6,35	0,89	20,00	9,48	42,23	6,35	0,89	20,00	6,06	4,27	36,20	37,70	13,66	4,13	0,16
0301TNL.XX.XX.V_A010NW_A010NW_A008NW_010	9,53	0,89	20,00	11,07	43,82	6,35	0,89	20,00	6,06	4,27	36,20	37,70	16,84	5,72	0,19
0301TNL.XX.XX.V_A010NW_A010NW_A010NW_010	9,53	0,89	20,00	11,07	43,82	9,53	0,89	20,00	4,47	5,86	36,20	37,70	16,84	5,72	0,19
0301TNL.XX.XX.V_A015NW_A015NW_A008NW_010	12,70	1,65	20,00	11,90	44,65	6,35	0,89	20,00	6,06	4,27	36,20	37,70	19,60	6,55	0,23
0301TNL.XX.XX.V_A015NW_A015NW_A010NW_010	12,70	1,65	20,00	11,90	44,65	9,53	0,89	20,00	4,47	5,86	36,20	37,70	19,60	6,55	0,23
0301TNL.XX.XX.V_A015NW_A015NW_A015NW_010	12,70	1,65	20,00	11,90	44,65	12,70	1,65	20,00	3,65	7,80	36,20	37,70	19,60	6,55	0,23
0301TNL.XX.XX.V_A015NW_A015NW_A015SA_010	12,70	1,65	20,00	11,90	40,40	25,00	7,80	15,75	3,65	13,90	36,20	37,70	27,70	6,55	0,32
0301TNL.XX.XX.V_A020NW_A020NW_A008NW_010	19,05	1,65	25,00	15,07	47,82	6,35	0,89	20,00	6,06	4,27	36,20	37,70	25,95	9,72	0,3
0301TNL.XX.XX.V_A020NW_A020NW_A010NW_010	19,05	1,65	25,00	15,07	47,82	9,53	0,89	20,00	4,47	5,86	36,20	37,70	25,95	9,72	0,3
0301TNL.XX.XX.V_A020NW_A020NW_A015NW_010	19,05	1,65	25,00	15,07	47,82	12,70	1,65	20,00	3,65	7,80	36,20	37,70	25,95	9,72	0,3
0301TNL.XX.XX.V_A020NW_A020NW_A020NW_010	19,05	1,65	25,00	15,07	52,82	19,05	1,65	25,00	0,47	10,97	36,20	37,70	25,95	9,72	0,3
0301TNL.XX.XX.V_A025NW_A025NW_A008NW_010	25,40	1,65	25,00	18,25	51,00	6,35	0,89	20,00	6,06	4,27	36,20	37,70	32,30	12,90	0,4
0301TNL.XX.XX.V_A025NW_A025NW_A010NW_010	25,40	1,65	25,00	18,25	51,00	9,53	0,89	20,00	4,47	5,86	36,20	37,70	32,30	12,90	0,39
0301TNL.XX.XX.V_A025NW_A025NW_A015NW_010	25,40	1,65	25,00	18,25	51,00	12,70	1,65	20,00	3,65	7,80	36,20	37,70	32,30	12,90	0,4
0301TNL.XX.XX.V_A025NW_A025NW_A020NW_010	25,40	1,65	25,00	18,25	56,00	19,05	1,65	25,00	0,47	10,97	36,20	37,70	32,30	12,90	0,4
0301TNL.XX.XX.V_A040NW_A040NW_A008NW_010	38,10	1,65	30,00	24,60	57,35	6,35	0,89	20,00	6,06	4,27	36,20	37,70	45,00	19,25	0,62
0301TNL.XX.XX.V_A040NW_A040NW_A010NW_010	38,10	1,65	30,00	24,60	57,35	9,53	0,89	20,00	4,47	5,86	36,20	37,70	45,00	19,25	0,62
0301TNL.XX.XX.V_A040NW_A040NW_A015NW_010	38,10	1,65	30,00	24,60	57,35	12,70	1,65	20,00	3,65	7,80	36,20	37,70	45,00	19,25	0,63
0301TNL.XX.XX.V_A040NW_A040NW_A020NW_010	38,10	1,65	30,00	24,60	62,35	19,05	1,65	25,00	0,47	10,97	36,20	37,70	45,00	19,25	0,62
0301TNL.XX.XX.V_A015NW_A015NW_A015NW_015	12,70	1,65	20,00	13,00	54,20	12,70	1,65	20,00	9,67	7,80	53,20	57,20	20,70	7,60	0,52
0301TNL.XX.XX.V_A020NW_A020NW_A015NW_015	19,05	1,65	25,00	16,17	57,37	12,70	1,65	20,00	9,67	7,80	53,20	57,20	27,05	10,77	0,63
0301TNL.XX.XX.V_A020NW_A020NW_A020NW_015	19,05	1,65	25,00	16,17	62,37	19,05	1,65	25,00	6,49	10,97	53,20	57,20	27,05	10,77	0,63
0301TNL.XX.XX.V_A025NW_A025NW_A015NW_015	25,40	1,65	25,00	19,35	60,55	12,70	1,65	20,00	9,67	7,80	53,20	57,20	33,40	13,95	0,74
0301TNL.XX.XX.V_A025NW_A025NW_A020NW_015	25,40	1,65	25,00	19,35	65,55	19,05	1,65	25,00	6,49	10,97	53,20	57,20	33,40	13,95	0,74
0301TNL.XX.XX.V_A025NW_A025NW_A025NW_015	25,40	1,65	25,00	19,35	65,55	25,40	1,65	25,00	3,32	14,15	53,20	57,20	33,40	13,95	0,73
0301TNL.XX.XX.V_A040NW_A040NW_A015NW_015	38,10	1,65	30,00	25,70	66,90	12,70	1,65	20,00	9,67	7,80	53,20	57,20	46,10	20,30	1,12
0301TNL.XX.XX.V_A040NW_A040NW_A020NW_015	38,10	1,65	30,00	25,70	71,90	19,05	1,65	25,00	6,49	10,97	53,20	57,20	46,10	20,30	1,12
0301TNL.XX.XX.V_A040NW_A040NW_A025NW_015	38,10	1,65	30,00	25,70	71,90	25,40	1,65	25,00	3,32	14,15	53,20	57,20	46,10	20,30	1,11
0301TNL.XX.XX.V_A050NW_A050NW_A015NW_015	50,80	1,65	30,00	32,05	73,25	12,70	1,65	20,00	9,67	7,80	53,20	57,20	58,80	26,65	1,53
0301TNL.XX.XX.V_A050NW_A050NW_A020NW_015	50,80	1,65	30,00	32,05	78,25	19,05	1,65	25,00	6,49	10,97	53,20	57,20	58,80	26,65	1,52
0301TNL.XX.XX.V_A050NW_A050NW_A025NW_015	50,80	1,65	30,00	32,05	78,25	25,40	1,65	25,00	3,32	14,15	53,20	57,20	58,80	26,65	1,52
0301TNL.XX.XX.V_A065NW_A065NW_A015NW_015	63,50	1,65	30,00	38,40	79,60	12,70	1,65	20,00	9,67	7,80	53,20	57,20	71,50	33,00	1,96
0301TNL.XX.XX.V_A065NW_A065NW_A020NW_015	63,50	1,65	30,00	38,40	84,60	19,05	1,65	25,00	6,49	10,97	53,20	57,20	71,50	33,00	1,96
0301TNL.XX.XX.V_A065NW_A065NW_A025NW_015	63,50	1,65	30,00	38,40	84,60	25,40	1,65	25,00	3,32	14,15	53,20	57,20	71,50	33,00	1,96
0301TNL.XX.XX.V_A025NW_A025NW_A025NW_020	25,40	1,65	25,00	20,55	71,99	25,40	1,65	25,00	7,62	14,15	64,40	71,50	34,60	14,79	1,13
0301TNL.XX.XX.V_A040NW_A040NW_A025NW_020	38,10	1,65	30,00	26,90	78,34	25,40	1,65	25,00	7,62	14,15	64,40	71,50	47,30	21,14	1,58

Note: Body parts / components begin with the code D.B.

Body variant code: 0301TNL

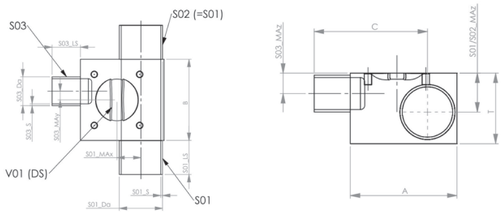

	S01/ S02					S03					A	B	T	Max	Weight [kg]
	Da	S	LS	Max	C	Da	S	LS	Max	C					
ASME-BPE/DIN-11866 R-C															
0301TNL.XX.XX.V_A050NW_A050NW_A025NW_020	50,80	1,65	30,00	27,49	84,69	25,40	1,65	25,00	7,62	28,20	64,40	71,50	60,00	27,49	2,13
0301TNL.XX.XX.V_A065NW_A065NW_A025NW_020	63,50	1,65	30,00	33,84	91,04	25,40	1,65	25,00	7,62	28,20	64,40	71,50	72,70	33,84	2,73
0301TNL.XX.XX.V_A080NW_A080NW_A025NW_020	76,20	1,65	30,00	40,19	97,39	25,40	1,65	25,00	7,62	28,20	64,40	71,50	85,40	40,19	3,36
0301TNL.XX.XX.V_A100NW_A100NW_A025NW_020	101,60	2,11	30,00	52,43	109,63	25,40	1,65	25,00	7,62	28,20	64,40	71,50	110,69	52,43	4,89
0301TNL.XX.XX.V_A025NW_A025NW_A025NW_025	25,40	1,65	25,00	15,59	77,69	25,40	1,65	25,00	11,64	28,20	74,20	82,70	37,60	15,59	1,65
0301TNL.XX.XX.V_A040NW_A040NW_A025NW_025	38,10	1,65	30,00	21,94	84,04	25,40	1,65	25,00	11,64	28,20	74,20	82,70	50,30	21,94	2,13
0301TNL.XX.XX.V_A050NW_A050NW_A025NW_025	50,80	1,65	30,00	28,29	90,39	25,40	1,65	25,00	11,64	28,20	74,20	82,70	63,00	28,29	2,84
0301TNL.XX.XX.V_A065NW_A065NW_A025NW_025	63,50	1,65	30,00	34,64	96,74	25,40	1,65	25,00	11,64	28,20	74,20	82,70	75,70	34,64	3,59
0301TNL.XX.XX.V_A080NW_A080NW_A025NW_025	76,20	1,65	30,00	40,99	103,09	25,40	1,65	25,00	11,64	28,20	74,20	82,70	88,40	40,99	4,39
0301TNL.XX.XX.V_A100NW_A100NW_A025NW_025	101,60	2,11	30,00	53,23	115,33	25,40	1,65	25,00	11,64	28,20	74,20	82,70	113,69	53,23	6,28
0301TNL.XX.XX.V_A040NW_A040NW_A040NW_025	38,10	1,65	30,00	21,94	89,04	38,10	1,65	30,00	5,29	40,90	74,20	82,70	50,30	21,94	2,11
0301TNL.XX.XX.V_A050NW_A050NW_A040NW_025	50,80	1,65	30,00	28,29	95,39	38,10	1,65	30,00	5,29	40,90	74,20	82,70	63,00	28,29	2,81
0301TNL.XX.XX.V_A065NW_A065NW_A040NW_025	63,50	1,65	30,00	34,64	101,74	38,10	1,65	30,00	5,29	40,90	74,20	82,70	75,70	34,64	3,56
0301TNL.XX.XX.V_A080NW_A080NW_A040NW_025	76,20	1,65	30,00	40,99	108,09	38,10	1,65	30,00	5,29	40,90	74,20	82,70	88,40	40,99	4,37
0301TNL.XX.XX.V_A100NW_A100NW_A040NW_025	101,60	2,11	30,00	53,23	120,33	38,10	1,65	30,00	5,29	40,90	74,20	82,70	113,69	53,23	6,25
0301TNL.XX.XX.V_A040NW_A040NW_A040NW_032	38,10	1,65	30,00	22,94	96,69	38,10	1,65	30,00	10,94	40,90	87,50	96,40	50,30	22,94	2,73
0301TNL.XX.XX.V_A050NW_A050NW_A040NW_032	50,80	1,65	30,00	29,29	103,04	38,10	1,65	30,00	10,94	40,90	87,50	96,40	63,00	29,29	3,6
0301TNL.XX.XX.V_A065NW_A065NW_A040NW_032	63,50	1,65	30,00	35,64	109,39	38,10	1,65	30,00	10,94	40,90	87,50	96,40	75,70	35,64	4,55
0301TNL.XX.XX.V_A080NW_A080NW_A040NW_032	76,20	1,65	30,00	41,99	115,74	38,10	1,65	30,00	10,94	40,90	87,50	96,40	88,40	41,99	5,55
0301TNL.XX.XX.V_A100NW_A100NW_A040NW_032	101,60	2,11	30,00	54,23	127,98	38,10	1,65	30,00	10,94	40,90	87,50	96,40	113,69	54,23	7,87
0301TNL.XX.XX.V_A040NW_A040NW_A040NW_040	38,10	1,65	30,00	23,39	102,89	38,10	1,65	30,00	13,00	40,90	99,00	111,90	53,30	23,39	3,93
0301TNL.XX.XX.V_A050NW_A050NW_A040NW_040	50,80	1,65	30,00	29,74	109,24	38,10	1,65	30,00	13,00	40,90	99,00	111,90	66,00	29,74	4,79
0301TNL.XX.XX.V_A065NW_A065NW_A040NW_040	63,50	1,65	30,00	36,09	115,59	38,10	1,65	30,00	13,00	40,90	99,00	111,90	78,70	36,09	5,98
0301TNL.XX.XX.V_A080NW_A080NW_A040NW_040	76,20	1,65	30,00	42,44	121,94	38,10	1,65	30,00	13,00	40,90	99,00	111,90	91,40	42,44	7,24
0301TNL.XX.XX.V_A100NW_A100NW_A040NW_040	101,60	2,11	30,00	54,68	134,18	38,10	1,65	30,00	13,00	40,90	99,00	111,90	116,69	54,68	10,12
0301TNL.XX.XX.V_A050NW_A050NW_A050NW_040	50,80	1,65	30,00	29,74	109,24	50,80	1,65	30,00	6,65	53,60	99,00	111,90	66,00	29,74	4,74
0301TNL.XX.XX.V_A065NW_A065NW_A050NW_040	63,50	1,65	30,00	36,09	115,59	50,80	1,65	30,00	6,65	53,60	99,00	111,90	78,70	36,09	5,93
0301TNL.XX.XX.V_A080NW_A080NW_A050NW_040	76,20	1,65	30,00	42,44	121,94	50,80	1,65	30,00	6,65	53,60	99,00	111,90	91,40	42,44	7,19
0301TNL.XX.XX.V_A100NW_A100NW_A050NW_040	101,60	2,11	30,00	54,68	134,18	50,80	1,65	30,00	6,65	53,60	99,00	111,90	116,69	54,68	10,07
0301TNL.XX.XX.V_A050NW_A050NW_A050NW_050	50,80	1,65	30,00	30,98	119,48	50,80	1,65	30,00	12,96	53,60	117,00	133,90	68,00	30,98	6,52
0301TNL.XX.XX.V_A065NW_A065NW_A050NW_050	63,50	1,65	30,00	37,33	125,83	50,80	1,65	30,00	12,96	53,60	117,00	133,90	80,70	37,33	8,05
0301TNL.XX.XX.V_A080NW_A080NW_A050NW_050	76,20	1,65	30,00	43,68	132,18	50,80	1,65	30,00	12,96	53,60	117,00	133,90	93,40	43,68	9,72
0301TNL.XX.XX.V_A100NW_A100NW_A050NW_050	101,60	2,11	30,00	55,92	144,42	50,80	1,65	30,00	12,96	53,60	117,00	133,90	118,69	55,92	13,47
0301TNL.XX.XX.V_A065NW_A065NW_A065NW_050	63,50	1,65	30,00	37,33	125,83	63,50	1,65	30,00	6,61	66,30	117,00	133,90	80,70	37,33	7,98
0301TNL.XX.XX.V_A080NW_A080NW_A065NW_050	76,20	1,65	30,00	43,68	132,18	63,50	1,65	30,00	6,61	66,30	117,00	133,90	93,40	43,68	9,65
0301TNL.XX.XX.V_A100NW_A100NW_A065NW_050	101,60	2,11	30,00	55,92	144,42	63,50	1,65	30,00	6,61	66,30	117,00	133,90	118,69	55,92	13,4

Note: Body parts / components begin with the code D.B.

Body variant code: 0301TNL

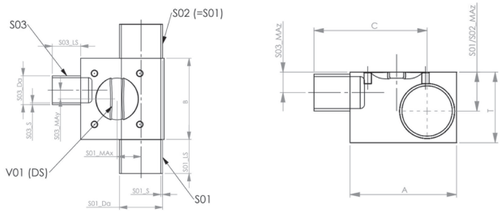

	S01/ S02					S03					A	B	T	Max	Weight [kg]
	Da	S	LS	Max	C	Da	S	LS	Max	C					
DIN-11866 R-A (11850 R-2)															
0301TNL.XX.XX.V_D008NW_D008NW_D008NW_010	10,00	1,00	20,00	5,85	10,00	1,00	8,00	4,35	6,10	8,45	36,20	37,70	17,20	5,85	0,2
0301TNL.XX.XX.V_D010NW_D010NW_D008NW_010	13,00	1,50	20,00	6,85	10,00	1,00	8,00	4,35	6,10	8,45	36,20	37,70	20,05	6,85	0,23
0301TNL.XX.XX.V_D010NW_D010NW_D010NW_010	13,00	1,50	20,00	6,85	13,00	1,50	10,00	3,35	7,95	11,63	36,20	37,70	20,05	6,85	0,23
0301TNL.XX.XX.V_D015NW_D015NW_D008NW_010	19,00	1,50	25,00	9,85	10,00	1,00	8,00	4,35	6,10	8,45	36,20	37,70	26,05	9,85	0,3
0301TNL.XX.XX.V_D015NW_D015NW_D010NW_010	19,00	1,50	25,00	9,85	13,00	1,50	10,00	3,35	7,95	11,63	36,20	37,70	26,05	9,85	0,3
0301TNL.XX.XX.V_D015NW_D015NW_D015NW_010	19,00	1,50	25,00	9,85	19,00	1,50	16,00	0,35	10,95	15,50	36,20	37,70	26,05	9,85	0,3
0301TNL.XX.XX.V_D020NW_D020NW_D008NW_010	23,00	1,50	25,00	11,85	10,00	1,00	8,00	4,35	6,10	27,70	36,20	37,70	30,05	11,85	0,35
0301TNL.XX.XX.V_D020NW_D020NW_D010NW_010	23,00	1,50	25,00	11,85	13,00	1,50	10,00	3,35	7,95	8,45	36,20	37,70	30,05	11,85	0,36
0301TNL.XX.XX.V_D020NW_D020NW_D015NW_010	23,00	1,50	25,00	11,85	19,00	1,50	16,00	0,35	10,95	11,63	36,20	37,70	30,05	11,85	0,35
0301TNL.XX.XX.V_D020NW_D020NW_D020NW_010	23,00	1,50	25,00	11,85	23,00	1,50	20,00	1,65	12,95	15,50	36,20	37,70	30,05	11,85	0,35
0301TNL.XX.XX.V_D025NW_D025NW_D008NW_010	29,00	1,50	25,00	14,85	10,00	1,00	8,00	4,35	6,10	21,85	36,20	37,70	36,05	14,85	0,45
0301TNL.XX.XX.V_D025NW_D025NW_D010NW_010	29,00	1,50	25,00	14,85	13,00	1,50	10,00	3,35	7,95	8,45	36,20	37,70	36,05	14,85	0,45
0301TNL.XX.XX.V_D025NW_D025NW_D015NW_010	29,00	1,50	25,00	14,85	19,00	1,50	16,00	0,35	10,95	11,63	36,20	37,70	36,05	14,85	0,45
0301TNL.XX.XX.V_D025NW_D025NW_D020NW_010	29,00	1,50	25,00	14,85	23,00	1,50	20,00	1,65	12,95	15,50	36,20	37,70	36,05	14,85	0,44
0301TNL.XX.XX.V_D032NW_D032NW_D008NW_010	35,00	1,50	30,00	17,85	10,00	1,00	8,00	4,35	6,10	21,85	36,20	37,70	42,05	17,85	0,56
0301TNL.XX.XX.V_D032NW_D032NW_D010NW_010	35,00	1,50	30,00	17,85	13,00	1,50	10,00	3,35	7,95	8,45	36,20	37,70	42,05	17,85	0,56
0301TNL.XX.XX.V_D032NW_D032NW_D015NW_010	35,00	1,50	30,00	17,85	19,00	1,50	16,00	0,35	10,95	11,63	36,20	37,70	42,05	17,85	0,56
0301TNL.XX.XX.V_D040NW_D040NW_D008NW_010	41,00	1,50	30,00	20,85	10,00	1,00	8,00	4,35	6,10	15,50	36,20	37,70	48,05	20,85	0,67
0301TNL.XX.XX.V_D040NW_D040NW_D010NW_010	41,00	1,50	30,00	20,85	13,00	1,50	10,00	3,35	7,95	21,85	36,20	37,70	48,05	20,85	0,67
0301TNL.XX.XX.V_D040NW_D040NW_D015NW_010	41,00	1,50	30,00	20,85	19,00	1,50	16,00	0,35	10,95	15,50	36,20	37,70	48,05	20,85	0,67
0301TNL.XX.XX.V_D015NW_D015NW_D015NW_015	19,00	1,50	25,00	10,90	19,00	1,50	16,00	6,37	10,95	15,50	53,20	57,20	27,15	10,90	0,63
0301TNL.XX.XX.V_D020NW_D020NW_D015NW_015	23,00	1,50	25,00	12,90	19,00	1,50	16,00	6,37	10,95	21,85	53,20	57,20	31,15	12,90	0,68
0301TNL.XX.XX.V_D020NW_D020NW_D020NW_015	23,00	1,50	25,00	12,90	23,00	1,50	20,00	4,37	12,95	15,50	53,20	57,20	31,15	12,90	0,68
0301TNL.XX.XX.V_D025NW_D025NW_D015NW_015	29,00	1,50	25,00	15,90	19,00	1,50	16,00	6,37	10,95	21,85	53,20	57,20	37,15	15,90	0,83
0301TNL.XX.XX.V_D025NW_D025NW_D020NW_015	29,00	1,50	25,00	15,90	23,00	1,50	20,00	4,37	12,95	28,20	53,20	57,20	37,15	15,90	0,83
0301TNL.XX.XX.V_D025NW_D025NW_D025NW_015	29,00	1,50	25,00	15,90	29,00	1,50	26,00	1,37	15,95	15,50	53,20	57,20	37,15	15,90	0,82
0301TNL.XX.XX.V_D032NW_D032NW_D015NW_015	35,00	1,50	30,00	18,90	19,00	1,50	16,00	6,37	10,95	21,85	53,20	57,20	43,15	18,90	1,02
0301TNL.XX.XX.V_D032NW_D032NW_D020NW_015	35,00	1,50	30,00	18,90	23,00	1,50	20,00	4,37	12,95	28,20	53,20	57,20	43,15	18,90	1,01
0301TNL.XX.XX.V_D032NW_D032NW_D025NW_015	35,00	1,50	30,00	18,90	29,00	1,50	26,00	1,37	15,95	15,50	53,20	57,20	43,15	18,90	1
0301TNL.XX.XX.V_D040NW_D040NW_D015NW_015	41,00	1,50	30,00	21,90	19,00	1,50	16,00	6,37	10,95	21,85	53,20	57,20	49,15	21,90	1,2
0301TNL.XX.XX.V_D040NW_D040NW_D020NW_015	41,00	1,50	30,00	21,90	23,00	1,50	20,00	4,37	12,95	28,20	53,20	57,20	49,15	21,90	1,19
0301TNL.XX.XX.V_D040NW_D040NW_D025NW_015	41,00	1,50	30,00	21,90	29,00	1,50	26,00	1,37	15,95	15,50	53,20	57,20	49,15	21,90	1,18
0301TNL.XX.XX.V_D050NW_D050NW_D015NW_015	53,00	1,50	30,00	27,90	19,00	1,50	16,00	6,37	10,95	21,85	53,20	57,20	61,15	27,90	1,58
0301TNL.XX.XX.V_D050NW_D050NW_D020NW_015	53,00	1,50	30,00	27,90	23,00	1,50	20,00	4,37	12,95	28,20	53,20	57,20	61,15	27,90	1,58
0301TNL.XX.XX.V_D050NW_D050NW_D025NW_015	53,00	1,50	30,00	27,90	29,00	1,50	26,00	1,37	15,95	28,20	53,20	57,20	61,15	27,90	1,57
0301TNL.XX.XX.V_D065NW_D065NW_D015NW_015	70,00	2,00	30,00	35,90	19,00	1,50	16,00	6,37	10,95	28,20	53,20	57,20	78,00	35,90	2,27

Note: Body parts / components begin with the code D.B.

Body variant code: 0301TNL

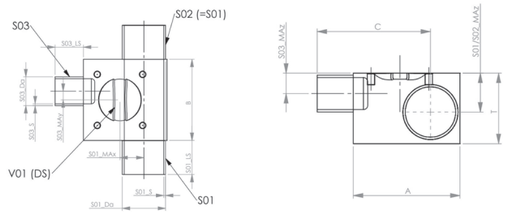

	S01/ S02					S03					A	B	T	Max	Weight [kg]
	Da	S	LS	Max	C	Da	S	LS	Max	C					
DIN-11866 R-A (11850 R-2)															
0301TNL.XX.XX.V_D065NW_D065NW_D020NW_015	70,00	2,00	30,00	35,90	87,50	53,20	1,50	25,00	1,37	31,80	53,20	57,20	78,00	35,90	2,26
0301TNL.XX.XX.V_D065NW_D065NW_D025NW_015	70,00	2,00	30,00	35,90	87,50	53,20	1,50	25,00	5,67	31,80	53,20	57,20	78,00	35,90	2,25
0301TNL.XX.XX.V_D025NW_D025NW_D025NW_020	29,00	1,50	25,00	16,74	73,94	64,40	1,50	25,00	5,67	31,80	64,40	71,50	38,35	16,74	1,18
0301TNL.XX.XX.V_D032NW_D032NW_D025NW_020	35,00	1,50	30,00	19,74	76,94	64,40	1,50	25,00	5,67	31,80	64,40	71,50	44,35	19,74	1,43
0301TNL.XX.XX.V_D040NW_D040NW_D025NW_020	41,00	1,50	30,00	22,74	79,94	64,40	1,50	25,00	5,67	31,80	64,40	71,50	50,35	22,74	1,68
0301TNL.XX.XX.V_D050NW_D050NW_D025NW_020	53,00	1,50	30,00	28,74	85,94	64,40	1,50	25,00	5,67	31,80	64,40	71,50	62,35	28,74	2,21
0301TNL.XX.XX.V_D065NW_D065NW_D025NW_020	70,00	2,00	30,00	36,74	93,94	64,40	1,50	25,00	5,67	31,80	64,40	71,50	79,20	36,74	3,11
0301TNL.XX.XX.V_D080NW_D080NW_D025NW_020	85,00	2,00	30,00	44,24	101,44	64,40	1,50	25,00	5,67	31,80	64,40	71,50	94,20	44,24	3,91
0301TNL.XX.XX.V_D100NW_D100NW_D025NW_020	104,00	2,00	30,00	53,74	110,94	64,40	1,50	25,00	9,69	31,80	64,40	71,50	113,20	53,74	5
0301TNL.XX.XX.V_D025NW_D025NW_D025NW_025	29,00	1,50	25,00	17,54	79,64	74,20	1,50	25,00	9,69	31,80	74,20	82,70	41,35	17,54	1,74
0301TNL.XX.XX.V_D032NW_D032NW_D025NW_025	35,00	1,50	30,00	20,54	82,64	74,20	1,50	25,00	9,69	31,80	74,20	82,70	47,35	20,54	1,95
0301TNL.XX.XX.V_D040NW_D040NW_D025NW_025	41,00	1,50	30,00	23,54	85,64	74,20	1,50	25,00	9,69	31,80	74,20	82,70	53,35	23,54	2,27
0301TNL.XX.XX.V_D050NW_D050NW_D025NW_025	53,00	1,50	30,00	29,54	91,64	74,20	1,50	25,00	9,69	31,80	74,20	82,70	65,35	29,54	2,94
0301TNL.XX.XX.V_D065NW_D065NW_D025NW_025	70,00	2,00	30,00	37,54	99,64	74,20	1,50	25,00	9,69	31,80	74,20	82,70	82,20	37,54	4,07
0301TNL.XX.XX.V_D080NW_D080NW_D025NW_025	85,00	2,00	30,00	45,04	107,14	74,20	1,50	25,00	9,69	31,80	74,20	82,70	97,20	45,04	5,06
0301TNL.XX.XX.V_D100NW_D100NW_D025NW_025	104,00	2,00	30,00	54,54	116,64	74,20	1,50	30,00	6,69	37,80	74,20	82,70	116,20	54,54	6,43
0301TNL.XX.XX.V_D032NW_D032NW_D032NW_025	35,00	1,50	30,00	20,54	87,64	74,20	1,50	30,00	6,69	37,80	74,20	82,70	47,35	20,54	1,94
0301TNL.XX.XX.V_D050NW_D050NW_D032NW_025	53,00	1,50	30,00	29,54	96,64	74,20	1,50	30,00	6,69	37,80	74,20	82,70	65,35	29,54	2,93
0301TNL.XX.XX.V_D065NW_D065NW_D032NW_025	70,00	2,00	30,00	37,54	104,64	74,20	1,50	30,00	6,69	37,80	74,20	82,70	82,20	37,54	4,06
0301TNL.XX.XX.V_D080NW_D080NW_D032NW_025	85,00	2,00	30,00	45,04	112,14	74,20	1,50	30,00	6,69	37,80	74,20	82,70	97,20	45,04	5,06
0301TNL.XX.XX.V_D100NW_D100NW_D032NW_025	104,00	2,00	30,00	54,54	121,64	74,20	1,50	30,00	12,34	37,80	74,20	82,70	116,20	54,54	6,42
0301TNL.XX.XX.V_D032NW_D032NW_D032NW_032	35,00	1,50	30,00	21,54	95,29	87,50	1,50	30,00	9,34	43,80	87,50	96,40	47,35	21,54	2,63
0301TNL.XX.XX.V_D040NW_D040NW_D040NW_032	41,00	1,50	30,00	24,54	98,29	87,50	1,50	30,00	12,34	37,80	87,50	96,40	53,35	24,54	2,89
0301TNL.XX.XX.V_D050NW_D050NW_D032NW_032	53,00	1,50	30,00	30,54	104,29	87,50	1,50	30,00	12,34	37,80	87,50	96,40	65,35	30,54	3,76
0301TNL.XX.XX.V_D065NW_D065NW_D032NW_032	70,00	2,00	30,00	38,54	112,29	87,50	1,50	30,00	12,34	37,80	87,50	96,40	82,20	38,54	5,15
0301TNL.XX.XX.V_D080NW_D080NW_D032NW_032	85,00	2,00	30,00	46,04	119,79	87,50	1,50	30,00	12,34	37,80	87,50	96,40	97,20	46,04	6,39
0301TNL.XX.XX.V_D100NW_D100NW_D032NW_032	104,00	2,00	30,00	55,54	129,29	87,50	1,50	30,00	11,40	43,80	87,50	96,40	116,20	55,54	8,08
0301TNL.XX.XX.V_D040NW_D040NW_D040NW_040	41,00	1,50	30,00	24,99	104,49	99,00	1,50	30,00	11,40	43,80	99,00	111,90	56,35	24,99	4,03
0301TNL.XX.XX.V_D050NW_D050NW_D040NW_040	53,00	1,50	30,00	30,99	110,49	99,00	1,50	30,00	11,40	43,80	99,00	111,90	68,35	30,99	4,97
0301TNL.XX.XX.V_D065NW_D065NW_D040NW_040	70,00	2,00	30,00	38,99	118,49	99,00	1,50	30,00	11,40	43,80	99,00	111,90	85,20	38,99	6,71
0301TNL.XX.XX.V_D080NW_D080NW_D040NW_040	85,00	2,00	30,00	46,49	125,99	99,00	1,50	30,00	11,40	43,80	99,00	111,90	100,20	46,49	8,26
0301TNL.XX.XX.V_D100NW_D100NW_D040NW_040	104,00	2,00	30,00	55,99	135,49	99,00	1,50	30,00	5,40	55,80	99,00	111,90	119,20	55,99	10,36
0301TNL.XX.XX.V_D050NW_D050NW_D050NW_040	53,00	1,50	30,00	30,99	110,49	99,00	1,50	30,00	5,40	55,80	99,00	111,90	68,35	30,99	4,91
0301TNL.XX.XX.V_D065NW_D065NW_D050NW_040	70,00	2,00	30,00	38,99	118,49	99,00	1,50	30,00	5,40	55,80	99,00	111,90	85,20	38,99	6,65
0301TNL.XX.XX.V_D080NW_D080NW_D050NW_040	85,00	2,00	30,00	46,49	125,99	99,00	1,50	30,00	5,40	55,80	99,00	111,90	100,20	46,49	8,21
0301TNL.XX.XX.V_D100NW_D100NW_D050NW_040	104,00	2,00	30,00	55,99	135,49	99,00	1,65	30,00	6,61	66,30	99,00	111,90	119,20	55,99	10,31

Note: Body parts / components begin with the code D.B.

Body variant code: 0301TNL

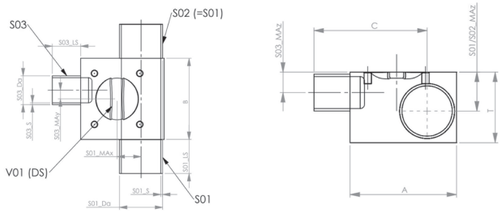

	S01/ S02					S03					A	B	T	Max	Weight [kg]
	Da	S	LS	Max	C	Da	S	LS	Max	C					
DIN-11866 R-A (11850 R-2)															
0301TNL.XX.XX.V_D050NW_D050NW_D050NW_050	53,00	1,50	30,00	32,23	120,73	53,00	1,50	30,00	11,71	55,80	117,00	133,90	70,35	32,23	6,71
0301TNL.XX.XX.V_D065NW_D065NW_D050NW_050	70,00	2,00	30,00	40,23	128,73	53,00	1,50	30,00	11,71	55,80	117,00	133,90	87,20	40,23	8,99
0301TNL.XX.XX.V_D080NW_D080NW_D050NW_050	85,00	2,00	30,00	47,73	136,23	53,00	1,50	30,00	11,71	55,80	117,00	133,90	102,20	47,73	11,04
0301TNL.XX.XX.V_D100NW_D100NW_D050NW_050	104,00	2,00	30,00	57,23	145,73	53,00	1,50	30,00	11,71	55,80	117,00	133,90	121,20	57,23	13,79
0301TNL.XX.XX.V_D065NW_D065NW_D065NW_050	70,00	2,00	30,00	40,23	128,73	70,00	2,00	30,00	3,71	73,50	117,00	133,90	87,20	40,23	8,92
0301TNL.XX.XX.V_D080NW_D080NW_D065NW_050	85,00	2,00	30,00	47,73	136,23	70,00	2,00	30,00	3,71	73,50	117,00	133,90	102,20	47,73	10,97
0301TNL.XX.XX.V_D100NW_D100NW_D065NW_050	104,00	2,00	30,00	57,23	145,73	70,00	2,00	30,00	3,71	73,50	117,00	133,90	121,20	57,23	13,71
ISO-1127 / DIN 11866 R-B															
0301TNL.XX.XX.V_I008NW_I008NW_I008NW_010	13,50	1,60	20,00	7,00	45,10	13,50	1,60	20,00	3,20	16,30	13,50	1,60	16,30	7,00	0,23
0301TNL.XX.XX.V_I010NW_I010NW_I008NW_010	17,20	1,60	25,00	8,85	46,95	13,50	1,60	20,00	3,20	16,30	13,50	1,60	16,30	8,85	0,27
0301TNL.XX.XX.V_I010NW_I010NW_I010NW_010	17,20	1,60	25,00	8,85	51,95	17,20	1,60	25,00	1,35	20,00	17,20	1,60	20,00	8,85	0,27
0301TNL.XX.XX.V_I015NW_I015NW_I008NW_010	21,30	1,60	25,00	10,90	49,00	13,50	1,60	20,00	3,20	16,30	13,50	1,60	16,30	10,90	0,33
0301TNL.XX.XX.V_I015NW_I015NW_I010NW_010	21,30	1,60	25,00	10,90	54,00	17,20	1,60	25,00	1,35	20,00	17,20	1,60	20,00	10,90	0,33
0301TNL.XX.XX.V_I015NW_I015NW_I015NW_010	21,30	1,60	25,00	10,90	54,00	21,30	1,60	25,00	0,70	24,10	21,30	1,60	24,10	10,90	0,33
0301TNL.XX.XX.V_I020NW_I020NW_I008NW_010	26,90	1,60	25,00	13,70	51,80	13,50	1,60	20,00	3,20	16,30	13,50	1,60	16,30	13,70	0,42
0301TNL.XX.XX.V_I020NW_I020NW_I010NW_010	26,90	1,60	25,00	13,70	56,80	17,20	1,60	25,00	1,35	20,00	17,20	1,60	20,00	13,70	0,42
0301TNL.XX.XX.V_I020NW_I020NW_I015NW_010	26,90	1,60	25,00	13,70	56,80	21,30	1,60	25,00	0,70	24,10	21,30	1,60	24,10	13,70	0,42
0301TNL.XX.XX.V_I025NW_I025NW_I008NW_010	33,70	2,00	25,00	16,70	54,80	13,50	1,60	20,00	3,20	16,30	13,50	1,60	16,30	16,70	0,56
0301TNL.XX.XX.V_I025NW_I025NW_I010NW_010	33,70	2,00	25,00	16,70	59,80	17,20	1,60	25,00	1,35	20,00	17,20	1,60	20,00	16,70	0,56
0301TNL.XX.XX.V_I025NW_I025NW_I015NW_010	33,70	2,00	25,00	16,70	59,80	21,30	1,60	25,00	0,70	24,10	21,30	1,60	24,10	16,70	0,55
0301TNL.XX.XX.V_I032NW_I032NW_I008NW_010	42,40	2,00	30,00	21,05	59,15	13,50	1,60	20,00	3,20	16,30	13,50	1,60	16,30	21,05	0,74
0301TNL.XX.XX.V_I032NW_I032NW_I010NW_010	42,40	2,00	30,00	21,05	64,15	17,20	1,60	25,00	1,35	20,00	17,20	1,60	20,00	21,05	0,74
0301TNL.XX.XX.V_I032NW_I032NW_I015NW_010	42,40	2,00	30,00	21,05	64,15	21,30	1,60	25,00	0,70	24,10	21,30	1,60	24,10	21,05	0,73
0301TNL.XX.XX.V_I040NW_I040NW_I008NW_010	48,30	2,00	30,00	24,00	62,10	13,50	1,60	20,00	3,20	16,30	13,50	1,60	16,30	24,00	0,85
0301TNL.XX.XX.V_I040NW_I040NW_I010NW_010	48,30	2,00	30,00	24,00	67,10	17,20	1,60	25,00	1,35	20,00	17,20	1,60	20,00	24,00	0,85
0301TNL.XX.XX.V_I040NW_I040NW_I015NW_010	48,30	2,00	30,00	24,00	67,10	21,30	1,60	25,00	0,70	24,10	21,30	1,60	24,10	24,00	0,85
0301TNL.XX.XX.V_I015NW_I015NW_I015NW_015	21,30	1,60	25,00	11,95	63,55	21,30	1,60	25,00	5,32	24,10	21,30	1,60	24,10	11,95	0,66
0301TNL.XX.XX.V_I020NW_I020NW_I015NW_015	26,90	1,60	25,00	14,75	66,35	21,30	1,60	25,00	5,32	24,10	21,30	1,60	24,10	14,75	0,78
0301TNL.XX.XX.V_I020NW_I020NW_I020NW_015	26,90	1,60	25,00	14,75	66,35	26,90	1,60	25,00	2,52	29,70	26,90	1,60	29,70	14,75	0,77
0301TNL.XX.XX.V_I025NW_I025NW_I015NW_015	33,70	2,00	25,00	17,75	69,35	21,30	1,60	25,00	5,32	24,10	21,30	1,60	24,10	17,75	1
0301TNL.XX.XX.V_I025NW_I025NW_I020NW_015	33,70	2,00	25,00	17,75	69,35	26,90	1,60	25,00	2,52	29,70	26,90	1,60	29,70	17,75	0,99
0301TNL.XX.XX.V_I032NW_I032NW_I015NW_015	42,40	2,00	30,00	22,10	73,70	21,30	1,60	25,00	5,32	24,10	21,30	1,60	24,10	22,10	1,29
0301TNL.XX.XX.V_I032NW_I032NW_I020NW_015	42,40	2,00	30,00	22,10	73,70	26,90	1,60	25,00	2,52	29,70	26,90	1,60	29,70	22,10	1,28
0301TNL.XX.XX.V_I040NW_I040NW_I015NW_015	48,30	2,00	30,00	25,05	76,65	21,30	1,60	25,00	5,32	24,10	21,30	1,60	24,10	25,05	1,48
0301TNL.XX.XX.V_I040NW_I040NW_I020NW_015	48,30	2,00	30,00	25,05	76,65	26,90	1,60	25,00	2,52	29,70	26,90	1,60	29,70	29,70	1,48

Note: Body parts / components begin with the code D.B.

Body variant code: 0301TNL

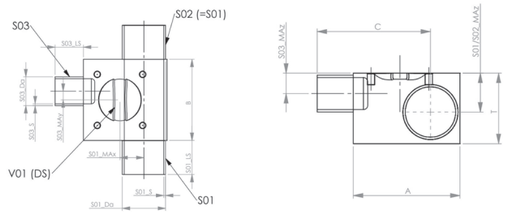

	S01/ S02					S03					A	B	T	Max	Weight [kg]
	Da	S	LS	Max	C	Da	S	LS	Max	C					
ISO-1127 / DIN 11866 R-B															
0301TNL.XX.XX.V_I040NW_I040NW_I025NW_015	48,30	2,00	30,00	25,05	76,65	33,70	2,00	25,00	0,48	37,20	53,20	57,20	56,30	25,05	1,47
0301TNL.XX.XX.V_I050NW_I050NW_I015NW_015	60,30	2,00	30,00	31,05	82,65	21,30	1,60	25,00	5,32	24,10	53,20	57,20	68,30	25,05	1,9
0301TNL.XX.XX.V_I050NW_I050NW_I020NW_015	60,30	2,00	30,00	31,05	82,65	26,90	1,60	25,00	2,52	29,70	53,20	57,20	68,30	31,05	1,9
0301TNL.XX.XX.V_I065NW_I065NW_I015NW_015	76,10	2,00	30,00	38,95	90,55	21,30	1,60	25,00	5,32	24,10	53,20	57,20	84,10	31,05	2,5
0301TNL.XX.XX.V_I065NW_I065NW_I020NW_015	76,10	2,00	30,00	38,95	90,55	26,90	1,60	25,00	2,52	29,70	53,20	57,20	84,10	38,95	2,49
0301TNL.XX.XX.V_I025NW_I025NW_I025NW_020	33,70	2,00	25,00	18,59	75,79	33,70	2,00	25,00	3,82	37,20	64,40	71,50	42,90	38,95	1,41
0301TNL.XX.XX.V_I032NW_I032NW_I025NW_020	42,40	2,00	30,00	22,94	80,14	33,70	2,00	25,00	3,82	37,20	64,40	71,50	51,60	18,59	1,8
0301TNL.XX.XX.V_I040NW_I040NW_I025NW_020	48,30	2,00	30,00	25,89	83,09	33,70	2,00	25,00	3,82	37,20	64,40	71,50	57,50	22,94	2,06
0301TNL.XX.XX.V_I050NW_I050NW_I025NW_020	60,30	2,00	30,00	31,89	89,09	33,70	2,00	25,00	3,82	37,20	64,40	71,50	69,50	25,89	2,63
0301TNL.XX.XX.V_I065NW_I065NW_I025NW_020	76,10	2,00	30,00	39,79	96,99	33,70	2,00	25,00	3,82	37,20	64,40	71,50	85,30	31,89	3,43
0301TNL.XX.XX.V_I080NW_I080NW_I025NW_020	88,90	2,30	30,00	45,89	103,09	33,70	2,00	25,00	3,82	37,20	64,40	71,50	98,15	39,79	4,22
0301TNL.XX.XX.V_I100NW_I100NW_I025NW_020	114,30	2,30	30,00	58,59	115,79	33,70	2,00	25,00	3,82	37,20	64,40	71,50	123,55	45,89	5,75
0301TNL.XX.XX.V_I025NW_I025NW_I025NW_025	33,70	2,00	25,00	19,39	81,49	33,70	2,00	25,00	7,84	37,20	74,20	82,70	45,90	58,59	1,91
0301TNL.XX.XX.V_I032NW_I032NW_I025NW_025	42,40	2,00	30,00	23,74	85,84	33,70	2,00	25,00	7,84	37,20	74,20	82,70	54,60	19,39	2,4
0301TNL.XX.XX.V_I040NW_I040NW_I025NW_025	48,30	2,00	30,00	26,69	88,79	33,70	2,00	25,00	7,84	37,20	74,20	82,70	60,50	23,74	2,74
0301TNL.XX.XX.V_I050NW_I050NW_I025NW_025	60,30	2,00	30,00	32,69	94,79	33,70	2,00	25,00	7,84	37,20	74,20	82,70	72,50	26,69	3,46
0301TNL.XX.XX.V_I065NW_I065NW_I025NW_025	76,10	2,00	30,00	40,59	102,69	33,70	2,00	25,00	7,84	37,20	74,20	82,70	88,30	32,69	4,46
0301TNL.XX.XX.V_I080NW_I080NW_I025NW_025	88,90	2,30	30,00	46,69	108,79	33,70	2,00	25,00	7,84	37,20	74,20	82,70	101,15	40,59	5,43
0301TNL.XX.XX.V_I100NW_I100NW_I025NW_025	114,30	2,30	30,00	59,39	121,49	33,70	2,00	25,00	7,84	37,20	74,20	82,70	126,55	46,69	7,34
0301TNL.XX.XX.V_I032NW_I032NW_I032NW_025	42,40	2,00	30,00	23,74	90,84	42,40	2,00	30,00	3,49	45,90	74,20	82,70	54,60	59,39	2,39
0301TNL.XX.XX.V_I050NW_I050NW_I032NW_025	60,30	2,00	30,00	32,69	99,79	42,40	2,00	30,00	3,49	45,90	74,20	82,70	72,50	23,74	3,44
0301TNL.XX.XX.V_I065NW_I065NW_I032NW_025	76,10	2,00	30,00	40,59	107,69	42,40	2,00	30,00	3,49	45,90	74,20	82,70	88,30	32,69	4,45
0301TNL.XX.XX.V_I080NW_I080NW_I032NW_025	88,90	2,30	30,00	46,69	113,79	42,40	2,00	30,00	3,49	45,90	74,20	82,70	101,15	40,59	5,42
0301TNL.XX.XX.V_I100NW_I100NW_I032NW_025	114,30	2,30	30,00	59,39	126,49	42,40	2,00	30,00	3,49	45,90	74,20	82,70	126,55	46,69	7,32
0301TNL.XX.XX.V_I032NW_I032NW_I032NW_032	42,40	2,00	30,00	24,74	98,49	42,40	2,00	30,00	9,14	45,90	87,50	96,40	54,60	59,39	3,06
0301TNL.XX.XX.V_I040NW_I040NW_I040NW_032	48,30	2,00	30,00	27,69	101,44	48,30	2,00	30,00	6,19	51,80	87,50	96,40	60,50	24,74	3,46
0301TNL.XX.XX.V_I050NW_I050NW_I032NW_032	60,30	2,00	30,00	33,69	107,44	42,40	2,00	30,00	9,14	45,90	87,50	96,40	72,50	27,69	4,38
0301TNL.XX.XX.V_I065NW_I065NW_I032NW_032	76,10	2,00	30,00	41,59	115,34	42,40	2,00	30,00	9,14	45,90	87,50	96,40	88,30	33,69	5,64
0301TNL.XX.XX.V_I080NW_I080NW_I032NW_032	88,90	2,30	30,00	47,69	121,44	42,40	2,00	30,00	9,14	45,90	87,50	96,40	101,15	41,59	6,83
0301TNL.XX.XX.V_I100NW_I100NW_I032NW_032	114,30	2,30	30,00	60,39	134,14	42,40	2,00	30,00	9,14	45,90	87,50	96,40	126,55	47,69	9,18
0301TNL.XX.XX.V_I040NW_I040NW_I040NW_040	48,30	2,00	30,00	28,14	107,64	48,30	2,00	30,00	8,25	51,80	99,00	111,90	63,50	60,39	4,6
0301TNL.XX.XX.V_I050NW_I050NW_I040NW_040	60,30	2,00	30,00	34,14	113,64	48,30	2,00	30,00	8,25	51,80	99,00	111,90	75,50	28,14	5,74
0301TNL.XX.XX.V_I065NW_I065NW_I040NW_040	76,10	2,00	30,00	42,04	121,54	48,30	2,00	30,00	8,25	51,80	99,00	111,90	91,30	34,14	7,32
0301TNL.XX.XX.V_I080NW_I080NW_I040NW_040	88,90	2,30	30,00	48,14	127,64	48,30	2,00	30,00	8,25	51,80	99,00	111,90	104,15	42,04	8,79
0301TNL.XX.XX.V_I100NW_I100NW_I040NW_040	114,30	2,30	30,00	60,84	140,34	48,30	2,00	30,00	8,25	51,80	99,00	111,90	129,55	48,14	11,71
0301TNL.XX.XX.V_I050NW_I050NW_I050NW_040	60,30	2,00	30,00	34,14	113,64	60,30	2,00	30,00	2,25	63,80	99,00	111,90	75,50	60,84	5,68

Note: Body parts / components begin with the code D.B.

Body variant code: 0301TNL

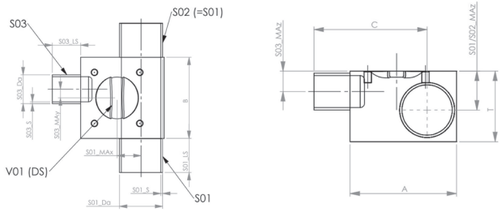

	S01/ S02					S03					A	B	T	Max	Weight [kg]
	Da	S	LS	Max	C	Da	S	LS	Max	C					
ISO-1127 / DIN 11866 R-B															
0301TNL.XX.XX.V_I065NW_I065NW_I050NW_040	76,10	2,00	30,00	42,04	121,54	60,30	2,00	30,00	2,25	63,80	99,00	111,90	91,30	34,14	7,26
0301TNL.XX.XX.V_I080NW_I080NW_I050NW_040	88,90	2,30	30,00	48,14	127,64	60,30	2,00	30,00	2,25	63,80	99,00	111,90	104,15	42,04	8,74
0301TNL.XX.XX.V_I100NW_I100NW_I050NW_040	114,30	2,30	30,00	60,84	140,34	60,30	2,00	30,00	2,25	63,80	99,00	111,90	129,55	48,14	11,65
0301TNL.XX.XX.V_I050NW_I050NW_I050NW_050	60,30	2,00	30,00	35,38	123,88	60,30	2,00	30,00	8,56	63,80	117,00	133,90	77,50	60,84	7,71
0301TNL.XX.XX.V_I065NW_I065NW_I050NW_050	76,10	2,00	30,00	43,28	131,78	60,30	2,00	30,00	8,56	63,80	117,00	133,90	93,30	35,38	9,8
0301TNL.XX.XX.V_I080NW_I080NW_I050NW_050	88,90	2,30	30,00	49,38	137,88	60,30	2,00	30,00	8,56	63,80	117,00	133,90	106,15	43,28	11,71
0301TNL.XX.XX.V_I100NW_I100NW_I050NW_050	114,30	2,30	30,00	62,08	150,58	60,30	2,00	30,00	8,56	63,80	117,00	133,90	131,55	49,38	15,51
0301TNL.XX.XX.V_I065NW_I065NW_I065NW_050	76,10	2,00	30,00	43,28	131,78	76,10	2,00	30,00	0,66	79,60	117,00	133,90	93,30	62,08	9,7
0301TNL.XX.XX.V_I080NW_I080NW_I065NW_050	88,90	2,30	30,00	49,38	137,88	76,10	2,00	30,00	0,66	79,60	117,00	133,90	106,15	43,28	11,61
0301TNL.XX.XX.V_I100NW_I100NW_I065NW_050	114,30	2,30	30,00	62,08	150,58	76,10	2,00	30,00	0,66	79,60	117,00	133,90	131,55	49,38	15,41

Note: Body parts / components begin with the code D.B.

www.goetze-group.com | info@goetze.de | Telephone: +49 (0) 7141 / 488 94 60

3.4.3. Tank bottom valve

Welded into the lowest point of the tank base, our tank bottom valve bodies are ideal for drainage, sterilisation, integrated sampling, filling or venting tanks. Various types of tank bottom valves can also be flexibly used at the base as drain valves during CIP/SIP cleaning and sterilisation. The tank can thus be emptied optimally.

Unlike a drain valve fitted in the base, our valves can also be installed on the side of the tank wall.

Features

- Minimal dead space and optimised geometry and design, specifically for use on tanks and in confined spaces
- Flow and drainage-optimised geometry throughout the entire product-contacting area
- Valve body materials: 1.4435 BN2 in solid material construction. Other special materials available on request.
- No weld seams within the body
- Internal surface finishes of the valve body in accordance with ASME BPE and DIN 11866 up to Ra 0.25 µm, as well as mechanically and/or electro-polished
- Integrated weld-in collar and GMP-compliant design
- Optional version with weld-in flange
- Connections such as weld ends, clamps, aseptic threaded unions, aseptic flanges or aseptic clamps are fitted in accordance with customer requirements and specifications
- Modular system with manual or pneumatic actuators (CIP/SIP capable)
- Position indicator and valve connection with simple adaptation

Body variant code: XNL & XWL (floor & wall) Material selection

Solid material: .V		
Material code	.3L	1.4435 (316L ASME BPE DT3 / BN2)

Special materials available on request.

Body variant code: D.B 201 XNL

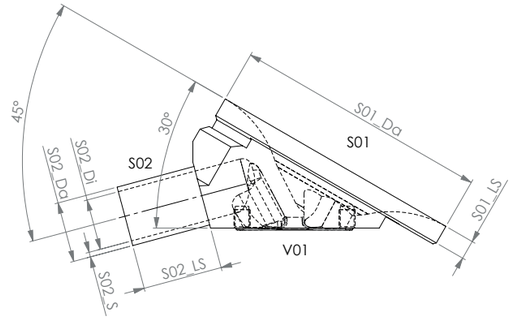

V01 DS	S01 Da [mm]	S01 LS
010	50	5
015	80	6
020	110	9
025	120	11
032	150	11
040	160	11
050	200	13

Please refer to the customer's drawing for the exact dimensions.

Order example for a tank bottom valve body with welded connections

Product groups component	Body variant	Valve body material	Internal surface	Semi-finished product		Connection S01		Connection S02		Connection S03		Seat V01
Diaphragm valve complete valve	3 nozzles (03) 1 seat (01)	1.4435 BN2/ 316L	internal: Ra ≤ 0.8, mechanically polished	Solid body		ASME-BPE (A) DN 015 (015) Standard length (N) Welded end (W)		ASME-BPE (A) DN 015 (015) Standard length (N) Welded end (W)		ASME-BPE (A) DN 015 (015) Standard length (N) Welded end (W)		Size DS020
D.B	0301XNL	.3L	.8N	.V	_	A015NW	_	A015NW	_	A015NW	_	020

3.4.4. Vlave blocks

Custom-made valve blocks manufactured from solid material enable our customers to combine a wide range of functions in a compact valve block with minimal dead space. Thanks to their bespoke design, a wide variety of functions – such as mixing, diverting, dosing or even a SIP or CIP connection – can be combined within a very small space.

As there are no welded seams whatsoever, our valve blocks are ideally suited to reducing the residual media volume to a minimum. Based on our experience, these customised solutions require detailed consultation in accordance with Good Manufacturing Practice (GMP). This enables customer requirements to be optimally translated into a 3D model from the P&ID, whilst adhering to 2D rules and 3D rules and taking drainage into account.

Thanks to our many years of experience in the manufacture of stainless steel valves, the production of such highly complex multifunctional bodies is standard practice for us. As there are no weld seams, the time-consuming validation process typically associated with Welded combinations involving pipework components is usually not required. This offers an efficient solution with enhanced safety for your applications.

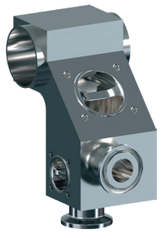

Features

- Customised and client-specific design with minimal dead space and optimised geometry
- Extremely compact design for optimised space requirements
- Valve body materials: 1.4435 BN2 (□ Fe < 0.5%) in solid material construction.
  Other special materials available on request.
- No weld seams as manufactured entirely from solid material – reduced validation requirements
- Drainage-optimised design for increased production reliability
- Internal surface finishes of the valve body in accordance with ASME BPE and DIN 11866 up to Ra 0.25 µm, as well as mechanically and/or electro-polished
- Connections such as weld ends, clamps, aseptic threaded unions, aseptic flanges or aseptic clamps are fitted according to customer requirements and design
- Modular system with manual or pneumatic actuators
- Position indicator and valve connection with simple adaptation

Material selection

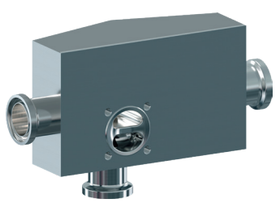

Solid material: .V		
Material code	.3L	1.4435 (316L ASME BPE DT3 / BN2)

Special materials available on request.

3.4.5. Welded combination

Traditionally, two straight valve bodies are joined together via a pipe section to form a Welded combination. This is a simple and cost-effective solution for making optimum use of limited space. These solutions offer a high degree of flexibility and functionality in terms of design, for example in confined spaces.

The dead space between the valves is reduced to a minimum. The connection is made via a single weld seam. Areas of application include, for example, condensate drainage, sampling or the control of CIP and SIP cleaning processes.

Our valve blocks are ideally suited for even more complex applications and for completely eliminating the need for weld seams. Here, the residual media volume can also be reduced to a minimum.

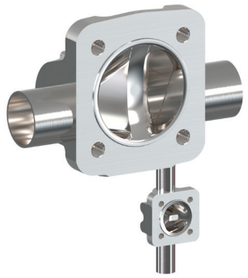

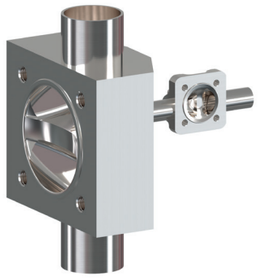

Features

- Customised and client-specific design with minimal dead space and optimised geometry in accordance with the 3D rule or the 6D rule
- Valve body materials: 1.4435 BN2 (□ Fe < 0.5%) in forged or solid material versions.
  Other materials available on request.
- Weld end and clamp connections are available as standard. Other connections, such as aseptic threaded unions, aseptic flanges or aseptic clamps, are available on request.
- Internal surface finishes of the valve body in accordance with ASME BPE and DIN 11866 up to Ra 0.25 µm, as well as mechanically and/or electro-polished
- Compact construction and GMP-compliant design
- Modular system with manual or pneumatic actuators
- Position indicator and valve connection with simple adaptation

Material selection

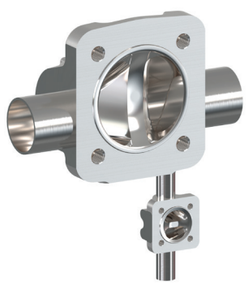

Solid material: .V		
Material code	.3L	1.4435 (316L ASME BPE DT3 / BN2)

Special materials available on request.

4. DIAPHRAGMS

4.1. Goetze Diaphragms

Goetze offers a range of diaphragms to meet different customer requirements and processes. This enables us to cover all areas of application. The original diaphragms for Goetze diaphragm valves are available for a variety of applications.

They are divided into two categories, **soft elastomer and PTFE diaphragms**, and meet Goetze's usual high standards of quality:

- tested on our in-house test benches
- manufactured and quality-controlled in accordance with
- Goetze's high standards
- certified production takes place at certified suppliers
- optimised for the Goetze sealing system

All Goetze diaphragms undergo constant and continuous rigorous testing on our in-house test benches. In particular, the Goetze process test bench is state-of-the-art and offers a wide range of options for testing the process parameters specified by customers with various diaphragms under realistic conditions.

The manufacture and quality control of the diaphagms are carried out in accordance with the recognised high Goetze standards. All Goetze diaphagms are clearly marked to ensure complete traceability (manufacturing process and material composition).

EPDM

PTFE / EPDM

PTFE / EPDM two-part

4.2. The benefits of the innovative Goetze sealing system

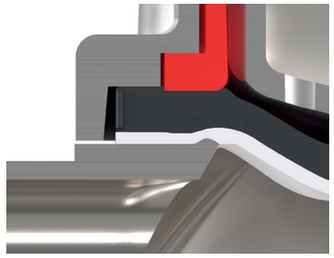

Quality. Safety. Competence – and we've been doing this since 1949.

Our extensive knowledge of valves, combined with fresh ideas from the market, has gone into the development of our diaphragm valves.

Like few other companies in the field of valve technology and fittings, we at Goetze combine the experience born of tradition with a spirit of innovation.

As a diaphragm valve specialist, we are now at home in almost all sectors and applications. We are technology leaders in stainless steel valves for aseptic and sterile applications in the pharmaceutical industry, biotechnology, and the food and beverage industry.

But our valves also stand for reliability and high quality standards in the chemical and process industries. The diaphragm, as the central sealing element in the pipe passage, is therefore of particular importance. Only this and the valve body come into contact with the medium. At the same time, it also ensures the hermetic sealing of the pipeline to the outside.

The system is more than the sum of its parts

The outstanding properties of the diaphragm valve result from the perfect interaction of all the precisely matched components. These are the valve body, the shut-off diaphragm, the diaphragm mounting, the pressure piece and the Actuator. Thanks to our many years of experience and close dialogue with plant operators, we have perfected the system and the individual components.

The innovative design of the diaphragm valve enables our customers to carry out valve maintenance quickly. The diaphragm can be replaced in a very short time, and the previously necessary 'retightening' of the four screws after the first steam sterilisation is no longer required.

The sealing edge, which in Goetze valve bodies—unlike in standard models—runs very close to and directly along the valve seat diameter, ensures a defined sealing edge and diaphragm pressing. This makes the diaphragm valves highly suitable for all sterile applications and processes.

Goetze sealing system vs. competitors' sealing systems

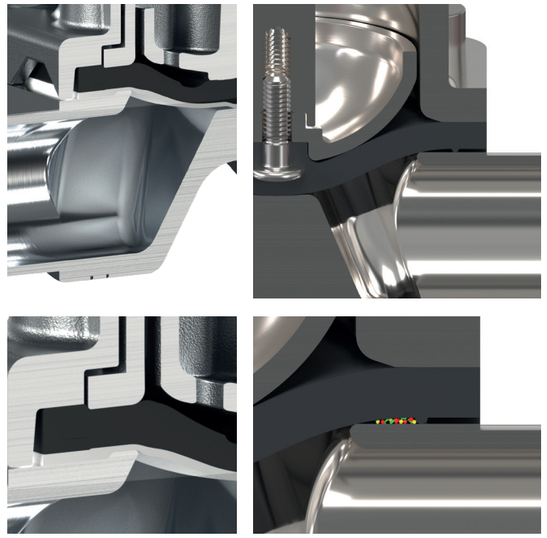

4.3. Flexible Goetze diaphragm mounting

The diaphragm is secured in the pressure piece using a threaded pin across the board. The only exception is the smallest diaphragm size (DS010), which is secured using a Rubber pin. This standardised fastening method applies to both soft elastomer and PTFE diaphragms; the main advantage of the threaded pin fastening over a bayonet lock is the even distribution of forces across the large surface area of the threaded flanks. This ensures that, particularly during vacuum operation, the mechanical connection between the pressure piece and the diaphragm remains undamaged. The standardised mounting of elastomer and PTFE diaphragms allows for the diaphragm to be replaced at a later date whilst using the existing actuator.

DS010

DS015 - DS50

4.4. The benefits for you

Install until fully seated, ensuring the fastening nuts are secured.

Flexible membrane suspension

Integrated compensation for the flow behaviour of the elastomeric membrane

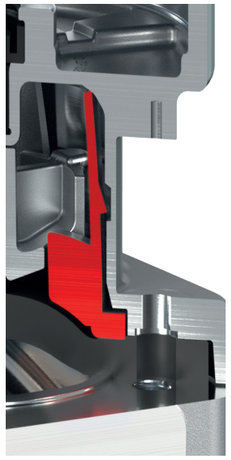

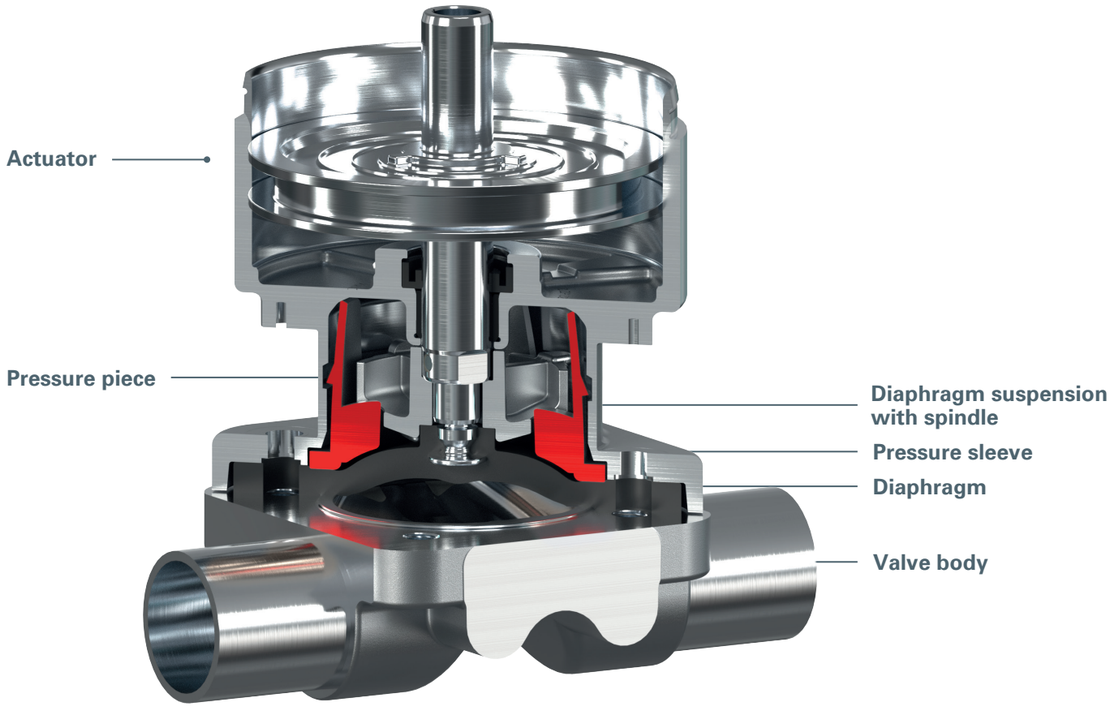

The innovative Goetze sealing system simplifies membrane replacement, reduces the risk of errors thanks to a mechanical stop, and does not require the fastening screws to be retightened after the first sterilisation.

The sealing system is ideally suited to Sterile processes and those with heightened hygiene requirements.

4.5. Compliance and inspections

There is no single universal diaphagm suitable for all applications. For this reason, we use a variety of rubber compounds and materials for our diaphagms. The different diaphagms have been certified in accordance with their main areas of application, enabling us to certify their compliance with the relevant regulations and standards.

FDA – Code of Federal Regulations (CFR)

Our products comply with those sections of Title 21 CFR (e.g. 174–179 for indirect food additives, 177 for polymers) in which materials intended to come into contact with food are classified as safe – including permissible extract limits and specifications for repeated use.

USP – Class VI

Our diaphragms have been tested by an independent institute in accordance with USP Class VI regulations (Chapter 87 In Vitro and Chapter 88 In Vivo) – including tests (121°C) for biocompatibility, cytotoxicity, systemic toxicity and pyrogenicity – and are free from animal-derived components.

EC 1935/2004

In accordance with EU Regulation (EC) No 1935/2004, our materials ensure safety by ensuring that, under intended conditions, no constituents are transferred to food in harmful quantities or in quantities that unduly alter the taste or smell – including requirements for packaging, labelling and traceability.

EU 10/2011

EU Regulation 10/2011 applies in particular to plastics: our plastic layers or articles use only monomers and additives listed on the positive list, which meet the requirements for total and specific migration as well as for documentation (Declaration of Compliance).

BSE/TSE

In accordance with EMA Guideline EMEA/EMA 410/01 Rev. 2, we minimise the risk of transmitting transmissible spongiform encephalopathies (e.g. BSE) by using only tested raw materials of animal origin – with clear risk categories ('high', 'lower', 'no detectable infectivity').

EMA/410/01/Rev. 2

This guideline ("Note for guidance on minimising the risk of transmitting animal spongiform encephalopathy agents via human and veterinary medicinal products") sets out requirements for starting materials such as gelatine or peptones in order to minimise the risk of transmission of TSE-related components.

4.6. Traceability

All our diaphagms are clearly marked to ensure full traceability.

Information on one-piece diaphragms

Informationen auf zweiteiligen Membranen

4.7. Soft elastomer and PTFE diaphagms

Soft elastomer diaphagms

Soft elastomer diaphagms are made from EPDM rubber compounds that are cross-linked (vulcanised) using peroxides. This allows the diaphagms to be used safely even at high media temperatures. Depending on the compound used and the processing conditions, such as the cross-linking time, vulcanisation temperature and vulcanisation pressure, the diaphagms acquire different technical properties. As a general rule for soft elastomer materials, the higher the temperature load, the shorter the service life in terms of mechanical stress. Therefore, for diaphrams, both the temperature load and the formability must be optimally matched to the specific application. Various design configurations are available to achieve this. In the case of mechanically contaminated operating media, such as cell clumps, solid particles or catalytic solids, soft elastomer diaphrams are characterised by a high degree of resistance. Neither the function of the valve nor the seal at the valve stem is generally affected by this.

PTFE diaphragms

Goetze PTFE diaphragms are made from chemically modified PTFE and offer maximum chemical resistance. Furthermore, even when exposed to steam, PTFE wears down much more slowly than a soft elastomer. However, the structure of PTFE materials requires a corresponding layer thickness when used with highly diffusive media, meaning that this diaphragm variant is stiffer than a pure soft elastomer diaphragm. Depending on the application, this increased stiffness can reduce the diaphragm's service life in cases involving high cycle counts.

4.7.1. Goetze EPDM diaphagms

Diaphragm Code .E1

Goetze has developed the EPDM diaphragms Code .E1 for use in pharmaceutical and biotechnology applications, as well as in the food and beverage industry. The Code .E1 diaphragm is particularly suitable for applications involving steam and high temperatures. The diaphragm is FDA-compliant in accordance with Title 21, Section 177, certified to USP Class VI, free from animal-derived components and RoHS-compliant.

Features Diaphragm Code: .E1

- Optimised for use in steam applications
- Resistant to thermal stress from heat and cold
- Improved long-term leak-tightness thanks to optimised contours
- Precise installation thanks to a vulcanised threaded pin with integrated screw-in stop from DS 15

Technical data

- -10 to 90°C with liquids
- Sterilisation temperature 140°C / 180 min[1] per cycle
- Available in sizes (DS) 010 to 050

[1] The sterilisation temperature applies to steam (saturated steam) or superheated water.

4.7.2. Goetze PTFE diaphagms

Diaphragm code .SE (two-part), .FE (fully laminated)

Goetze PTFE/EPDM two-part diaphragms consist of a PTFE face and an EPDM backing. These two components are combined either rigidly (code .FE) or flexibly (code .SE).

The flexible PTFE diaphragm combines all the advantages of PTFE with the flexibility of an elastomer diaphragm in a single product. To optimise the overall system, both the PTFE shield and the diaphragm backing are compounded and manufactured within the Goetze Group.

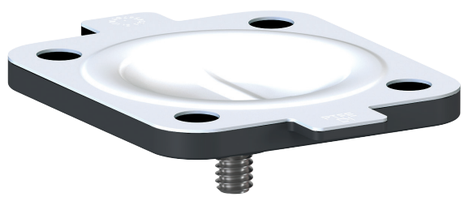

Features:

- Resistant even to high temperatures
- High chemical resistance thanks to PTFE shield
- Simple and precise installation possible
- .SE: Sintered (from DS015) threaded pin
- .FE: Vulcanised (from DS015) threaded pin with integrated screw-in stop or vulcanised (DS010) elastomer pin

Technical data

- -10 to 100°C continuous use with liquid media
- Sterilisation temperature 150°C / 160°C[1] with no time limit per cycle
- Available as variant .FE in sizes (DS) 010 to 050
- Available as variant .SE in sizes 015 to 050

[1] The sterilisation temperature applies to steam (saturated steam) or superheated water.

4.8. Goetze Diaphragm Selection

As a general policy, each specific application must be analysed before selecting materials, including the choice of diaphragm materials. As operating conditions can vary significantly at different points within a plant, it may be necessary to use different valves and materials. In particular, the chemical properties and temperature of the process media give rise to a wide range of interactions. The suitability of the materials used must therefore always be checked individually against the current compatibility lists or by an authorised specialist. This is the only way to ensure that the application operates with high levels of safety and cost-effectiveness over the long term.

Diaphragms are wear parts. They must be inspected and replaced regularly, as failure to do so may result in malfunctions and, in some cases, hazardous situations.

Please note: The maintenance intervals for inspecting and replacing the diaphragms depend on the application. To determine a suitable maintenance interval, the maintenance history and the stress caused by frequent sterilisation or frequent switching cycles must be taken into account.

Note
As plastics and elastomers are subject to natural ageing, we recommend observing the Goetze storage conditions for shut-off diaphragms. This ensures maximum storage life and service life for the diaphragms. The temperatures specified above represent only the permissible temperature ranges for the respective diaphragm in each case. When sizing the entire valve assembly, the permissible temperature ranges of the valve must always be taken into account. These can be found in the relevant data sheets in each case. The temperature values are specified independently of the operating pressure and the Diaphragm size and apply to water or inert gases. When using water or saturated steam, the vapour pressure curve must be observed.

Diaphragm	Material / Design	DS	Temperature range (°C) for liquid media		Sterilisation[1]	Code
			Min	Max		
EPDM	Ethylene-propylene-diene rubber	010 - 050	-10	100	max. 140°C[2] max. 180 min. per cycle	.E1
PTFE / EPDM	Fully laminated diaphragm with EPDM backing	010 - 050	-10	100	max. 150°C[2], no time limit per cycle	.FE
PTFE / EPDM	Convex two-piece diaphragm with loose EPDM backing	015 - 050	-10	100	max. 160°C[2], no time limit per cycle	.SE

[1] The Sterilisation temperature applies to steam (saturated steam). Sterilisation temperature for superheated water: 121°C.
[2] If EPDM diaphrams or laminated PTFE diaphrams are exposed to the Sterilisation temperatures listed above for prolonged periods, the service life of the diaphram will be reduced. In such cases, the maintenance cycles must be adjusted accordingly. This also applies to PTFE diaphragms that are exposed to high temperature fluctuations.

PTFE diaphragms can also be used as a vapour barrier, although this reduces their service life. The maintenance cycles must be adjusted accordingly.

4.9. Goetze Diaphragm Dimensions

DS*	A	B	C	D	Ø d	T	h	W	Stud bolt	Number of drill holes	Order code example
010	22	22	31,5	31,5	4,7	4	5,5	-	M4	4	E-DL-010-.E1-01
015	37	33	47	49	6,5	5	7	M4	M5	4	E-DL-015-.SE-01
020	45	40	62	57	7,5	5,2	7,5	¼" UNC	M6	4	E-DL-020-.E1-01
025	54	46	72	67	9,5	6	8	¼" UNC	M8	4	E-DL-025-.SE-01
032	67	60	88	81,5	9,5	6	8	¼" UNC	M8	4	E-DL-032-.E1-01
040	70	65	98,5	90	11,5	7	8	¼" UNC	M10	4	E-DL-040-.SE-01
050	82	78	120	106	14	7	8	¼" UNC	M12	4	E-DL-050-.E1-01

*DS: Diaphragm size

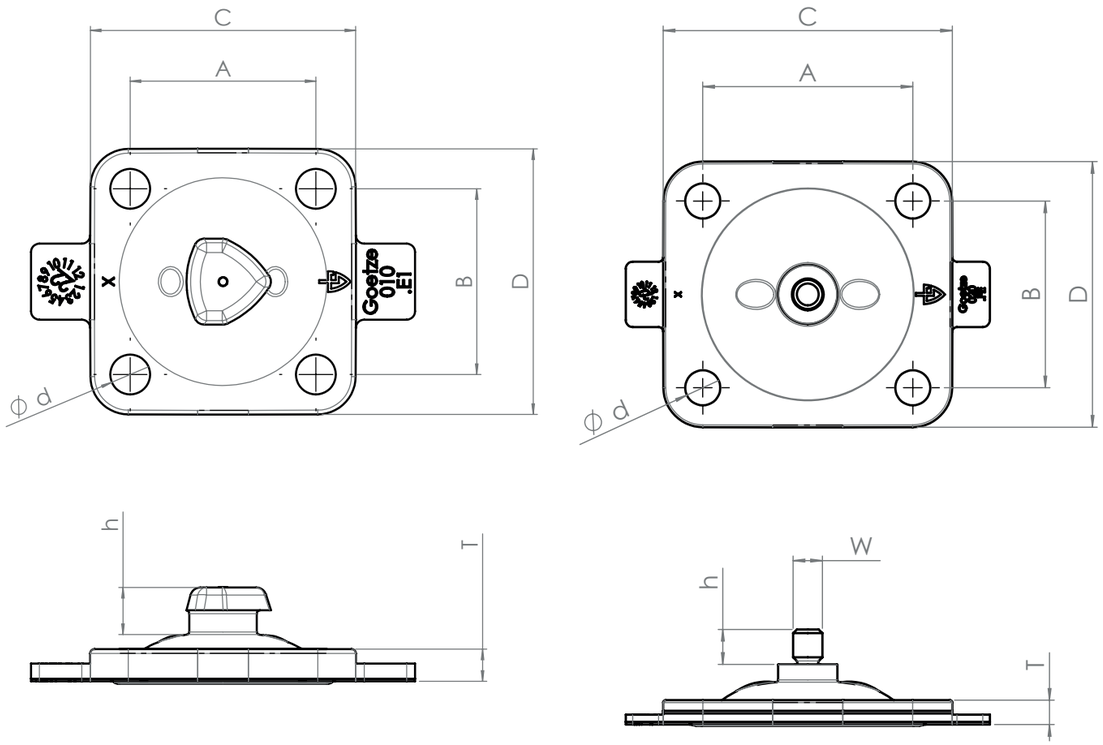

4.10. Goetze Membrane Expertise

Manufacturing and Documentation

At Goetze, nothing is left to chance when it comes to the development and manufacture of diaphragms. In addition to many years of experience in the valve sector, we can draw on the Goetze Group's ever-growing expertise in the field of diaphragm production.

The high standard of Goetze diaphragm quality is ensured, amongst other things, by the following measures implemented by our suppliers:

- Procurement of raw materials exclusively from selected suppliers
- Extensive testing of raw materials in the laboratory or at external, accredited institutions
- Storage of raw materials under controlled conditions
- Automated testing and documentation processes during production
- Modern production facilities
- Testing of diaphragms on Goetze's own test benches (including special test cycles for the pharmaceutical industry)

4.11. Manufacture of Goetze diaphragms

The relevant process for the relevant components:

- Manufacture of elastomer parts using injection moulding and compression moulding under vacuum
- Manufacture of PTFE parts using sintering processes under cleanroom conditions
- Production of durable elastomer bonds with metal, PTFE, fabric, etc.

For the elastomer seal sector, the Goetze Group has access to an extensive range of machinery, e.g. including:

- Compression presses
- Injection moulding machines
- Punching presses
- Tempering furnaces

from qualified suppliers.

This is supplemented by equipment for PTFE moulding. This includes, amongst other things:

- Presses
- Sintering furnaces
- Equipment for the quenching process

4.12. In-process inspection and documentation at Goetze

- Inspection of the raw material supplied in accordance with the test report
- Shore hardness test
- Testing by vulcametry (statistical and continuous
- process control during vulcanisation)
- Statistical and continuous process control during curing (monitoring of temperature, holding time, temperature profile, humidity and other parameters that may affect the quality of the end product)
- Measurement of the threaded pin, position and length in the finished diaphragm
- Pull-out strength of the diaphragm pin
- Dimensional accuracy of the diaphragm, diaphragm thickness, width, length and height
- 100% visual inspection

4.13. Storage and shelf life of elastomer components

In accordance with the standard set out in ISO 2230, proper storage is essential to achieve the specified service life. It is explicitly stated that the relevant standards must be taken into account in this regard.

The elastomer products manufactured by us and our qualified suppliers may be used by our customers on the condition that no more than the time specified in the table has elapsed since the date of manufacture. According to Götze's specifications, the maximum storage period refers to the year of production.

The date of manufacture is determined by analysing the batch number, which is embossed on the diaphragm. The batch number consists of the production batch and the year of manufacture. To determine the exact date of manufacture, an enquiry must be made to Götze, quoting the batch number.Storage and shelf life of elastomer components

Special precautions must be taken when storing the diaphrams:

- Temperature below 25°C, preferably 15°C, but not below -10°C
- Protection from light, particularly light with a high UV content (such as sunlight!)
- Relative humidity below 65%
- Storage rooms must not contain any ozone-generating equipment (e.g. electric motors) or any solvents, fuels, chemicals, etc.
- Do not use films containing plasticisers for packaging
- Store the diaphragms in a relaxed state, i.e. without tension, pressure or other deformations; they should not, for example, be suspended by a corner of their circumference (e.g. holes)

Elastomer seals are made of organic materials, which can be damaged by external factors such as oxygen, ozone, heat, etc. The measures mentioned above are necessary to achieve the maximum storage life

Elastomer	Code	Max. storage life in years	Max. recommended service life in years*
EPDM	.E1	5	2
PTFE / EPDM	.FE, .SE	5	4

* It is also recommended that diaphragms in service be replaced no later than the times specified above. The values given are for guidance only and may vary significantly depending on operating conditions (temperature, pressure, media, switching frequency, etc.).

4.14. Goetze replacement membranes

Replacement diaphragms can be ordered separately using the part numbers listed below. For traceability purposes, we also offer the option of ordering the diaphragms individually packaged and labelled, together with the relevant Inspection certificate.

DS	Item number (loose pack)	Item number (individually packaged)
010	E-DL-010-.E1-01	E-DP-010-.E1-01
	/	/
	E-DL-010-.FE-01	E-DP-010-.FE-01
015	E-DL-015-.E1-01	E-DP-015-.E1-01
	E-DL-015-.SE-01	E-DP-015-.SE-01
	E-DL-015-.FE-01	E-DP-015-.FE-01
020	E-DL-020-.E1-01	E-DP-020-.E1-01
	E-DL-020-.SE-01	E-DP-020-.SE-01
	E-DL-020-.FE-01	E-DP-020-.FE-01
025	E-DL-025-.E1-01	E-DP-025-.E1-01
	E-DL-025-.SE-01	E-DP-025-.SE-01
	E-DL-025-.FE-01	E-DP-025-.FE-01
032	E-DL-032-.E1-01	E-DP-032-.E1-01
	E-DL-032-.SE-01	E-DP-032-.SE-01
	E-DL-032-.FE-01	E-DP-032-.FE-01
040	E-DL-040-.E1-01	E-DP-040-.E1-01
	E-DL-040-.SE-01	E-DP-040-.SE-01
	E-DL-040-.FE-01	E-DP-040-.FE-01
050	E-DL-050-.E1-01	E-DP-050-.E1-01
	E-DL-050-.SE-01	E-DP-050-.SE-01
	E-DL-050-.FE-01	E-DP-050-.FE-01

Example

E-DL-010-.E1-01	E-DL: Diaphragm loose	010 : DS (Diaphragm size)
E-DP-010-.E1-01	E-DP: Diaphragm separately packaged	.E1 : Diaphragm code

5. GOETZE ACTUATORS

Goetze offers the option of fitting all diaphragm valves with a manual or pneumatically actuated actuator. Thanks to their compact design, these are ideal for use in confined spaces.

The manual actuator, available with either a plastic or stainless steel handwheel, ensures reliable operation in aseptic or aggressive environments. As standard, the manual actuators feature an integrated closing or opening stroke limit, as well as a visual position indicator.

The pneumatic actuators are available in the versions 'spring-to-close (NC)', 'spring-to-open (NO)' and 'double-acting (DA)'. An electronic sensor for position feedback is available as an option. All Goetze actuators feature a compact design with controlled exhaust air routing as standard and are compatible with all Goetze diaphragm valves.

Autoclavable versions are available as an option. The optional integrated nut retainer also offers a simple and cost-effective way to reduce the time required for installation and maintenance work, as the nuts cannot be lost.

Thanks to a standardised thread, the integration and adaptation of automation accessories and add-on components is possible at any time.

5.1. Goetze manually operated actuators

manual

.MNN	Manual actuator, standard version
.MSN	Manual actuator, standard version, stainless steel handwheel
.MSH	Manual actuator, standard version, smooth stainless steel handwheel
.HSH	Handwheel actuator, adapter without nut retainer, smooth stainless steel handwheel
.HSN	Handwheel actuator, adapter without nut retainer, stainless steel handwheel

- System pressure: 0–10 bar
- Operating temperature: –10–150 °C
- Standard visual position indicator
- Standard with all-round diaphragm surround
- Standard with integrated travel or closing stop
- Actuator material: stainless steel

Version	Diaphragm size DS	Handwheel material	Nut holder	Autoclavable	Order code
MNN	010 - 50	Plastic	X	Yes, up to 121°C	E-AM-010-MNN-01
MSN	010 - 50	Stainless steel	X	Yes, up to 121°C	E-AM-010-MSN-01
MSH	010 - 020	Smooth stainless steel	X	Yes, up to 121°C	E-AM-010-MSH-01
HSH	010 - 020	Smooth stainless steel	-	Yes, up to 121°C	E-AM-010-HSH-01
HSN	010 - 040	Stainless steel		Yes, up to 121°C	E-AM-010-HSN-01

Dimensions of the MNN model

Type code	Listing/ DS	Options	A	B	DS1	DS2	DM	DP	PH	PH2	MH	ST	C1	C2	M	MC	Weight [kg]	Air volume [cm³]
D-AM-010-.MNN-01	Manual / 010 / 10 bar	Stainless steel handwheel, Initiator, aseptic exterior	36,5	36,5	22,0	22,0	39,5	38,0	77,7	65,6	56,1	4,5	19,3	59,7	M4	–	0,16	–
D-AM-015-.MNN-01	Manual / 015 / 10 bar	Stainless steel handwheel, Initiator, aseptic exterior	55,6	53,6	37,0	33,0	60,0	56,0	90,0	77,9	68,7	7,0	22,9	72,9	M5	–	0,5	–
D-AM-020-.MNN-01	Manual / 020 / 10 bar	Stainless steel handwheel, Initiator, aseptic exterior	69,2	64,2	45,0	40,0	78,0	66,0	99,4	87,4	82,8	9,0	27,9	82,4	M6	–	0,95	–
D-AM-025-.MNN-01	Manual / 025 / 10 bar	Stainless steel handwheel, Initiator, aseptic exterior	81,2	75,2	54,0	46,0	90,0	76,0	109,8	97,7	95,0	11,0	29,3	87,2	M8	–	0,95	–
D-AM-032-.MNN-01	Manual / 032 / 10 bar	Stainless steel handwheel, Initiator, aseptic exterior	96,2	89,7	67,0	60,0	100,0	92,0	120,1	108,1	103,7	13,0	32,9	97,6	M8	–	1,7	–
D-AM-040-.MNN-01	Manual / 040 / 10 bar	Stainless steel handwheel, Initiator, aseptic exterior	109,8	99,8	70,0	65,0	118,0	107,0	133,9	121,8	119,4	16,0	37,4	111,3	M10	–	2,26	–
D-AM-050-.MNN-01	Manual / 050 / 10 bar	Stainless steel handwheel, Initiator, aseptic exterior	130,4	116,4	82,0	78,0	148,0	122,0	158,5	146,4	129,6	22,0	48,3	135,9	M12	–	3,74	–

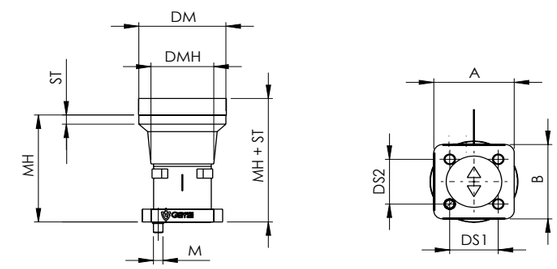

5.2. Goetze pneumatic actuators

pneumatic

.CNN	Pneumatikantrieb NC (Federkraft geschlossen) | PS 10 bar Pst 4,5 bar - 7 bar
.ONN	Pneumatikantrieb NO (Federkraft geöffnet) | PS 10 bar Pst 4,5 bar - 6 bar
.RNN	Pneumatikantrieb NC Kompaktversion (Federkraft geschlossen) | PS 6 bar Pst 5,5 bar - 7 bar

- Umgebungstemperatur - 10°C bis 60°C
- Serienmäßige Ausführung mit Edelstahl Oberteil
- Serienmäßige optische Stellungsanzeige
- Serienmäßig mit Membraneinfassung umlaufend
- Werkstoff Antrieb: Edelstahl
- Optional autoklavierbar

Version	Diaphragm size DS	Rest position	System pressure (bar)	Control pressure (bar)	Nut holder	Autoclavable	Order code
CNN	010 - 050	NC	0 - 10	4,5 - 7,0	X	Yes, up to 121°C	E-AP-020-CNN-01
ONN	010 - 050	NO	0 - 10	4,5 - 6,0	X	Yes, up to 121°C	E-AP-010-ONN-01
RNN	010 - 050	NC Compact size	0 - 6	5,5 - 7,0	X	Yes, up to 121°C	E-AP-010-RNN-01

Dimensions, .CNN version

Type code	Listing/ DS	Options	A	B	DS1	DS2	DM	DP	PH	PH2	MH	ST	C1	C2	M	MC	Weight [kg]	Air volume [cm³]
D-AP-010-.CNN-01	NC / 010 / 10 bar	Stroke limiter, closing limiter, electric position indicator	36,5	36,5	22,0	22,0	39,5	48,0	77,2	65,1	56,1	4,5	19,3	59,3	M4	M5	0,5	14
D-AP-015-.CNN-01	NC / 015 / 10 bar	Stroke limiter, closing limiter, electric position indicator	55,6	53,6	37,0	33,0	60,0	66,0	90,5	78,5	68,7	7,0	22,9	73,5	M5	M5	0,9	38
D-AP-020-.CNN-01	NC / 020 / 10 bar	Stroke limiter, closing limiter, electric position indicator	69,2	64,2	45,0	40,0	78,0	76,0	100,2	88,2	82,8	9,0	28,4	83,2	M6	M5	1,4	58
D-AP-025-.CNN-01	NC / 025 / 10 bar	Stroke limiter, closing limiter, electric position indicator	81,2	75,2	54,0	46,0	90,0	92,0	115,5	103,4	95,0	11,0	30,3	92,9	M8	G1/8	2,3	93
D-AP-032-.CNN-01	NC / 032 / 10 bar	Stroke limiter, closing limiter, electric position indicator	96,2	89,7	67,0	60,0	100,0	107,0	127,4	115,3	103,7	13,0	32,9	104,8	M8	G1/8	3,3	153
D-AP-040-.CNN-01	NC / 040 / 10 bar	Stroke limiter, closing limiter, electric position indicator	109,8	99,8	70,0	65,0	118,0	122,0	144,3	132,2	119,4	16,0	38,4	121,7	M10	G1/8	4,7	222
D-AP-050-.CNN-01	NC / 050 / 10 bar	Stroke limiter, closing limiter, electric position indicator	130,4	116,4	82,0	78,0	148,0	148,0	163,6	151,5	129,6	22,0	48,8	141,0	M12	G1/8	7,3	416

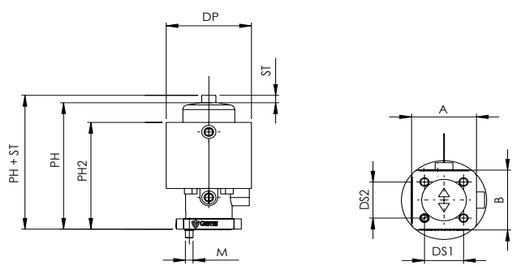

Dimensions, .ONN version

Type code	Listing/ DS	Options	A	B	DS1	DS2	DM	DP	PH	PH2	MH	ST	C1	C2	M	MC	Weight [kg]	Air volume [cm³]
D-AP-010-.ONN-01	NO / 010 / 10 bar	Stroke limiter, closing limiter, electric position indicator	36,5	36,5	22,0	22,0	39,5	38,0	77,7	65,6	56,1	4,5	19,3	59,7	M4	M5	0,3	9
D-AP-015-.ONN-01	NO / 015 / 10 bar	Stroke limiter, closing limiter, electric position indicator	55,6	53,6	37,0	33,0	60,0	56,0	90,0	77,9	68,7	7,0	22,9	72,9	M5	M5	0,6	40
D-AP-020-.ONN-01	NO / 020 / 10 bar	Stroke limiter, closing limiter, electric position indicator	69,2	64,2	45,0	40,0	78,0	66,0	99,4	87,4	82,8	9,0	27,9	82,4	M6	M5	0,9	70
D-AP-025-.ONN-01	NO / 025 / 10 bar	Stroke limiter, closing limiter, electric position indicator	81,2	75,2	54,0	46,0	90,0	76,0	109,8	97,7	95,0	11,0	29,3	87,2	M8	M5	1,3	95
D-AP-032-.ONN-01	NO / 032 / 10 bar	Stroke limiter, closing limiter, electric position indicator	96,2	89,7	67,0	60,0	100,0	92,0	120,1	108,1	103,7	13,0	32,9	97,6	M8	G1/8	2	152
D-AP-040-.ONN-01	NO / 040 / 10 bar	Stroke limiter, closing limiter, electric position indicator	109,8	99,8	70,0	65,0	118,0	107,0	133,9	121,8	119,4	16,0	37,4	111,3	M10	G1/8	2,7	247
D-AP-050-.ONN-01	NO / 050 / 10 bar	Stroke limiter, closing limiter, electric position indicator	130,4	116,4	82,0	78,0	148,0	122,0	158,5	146,4	129,6	22,0	48,3	135,9	M12	G1/8	4,2	487

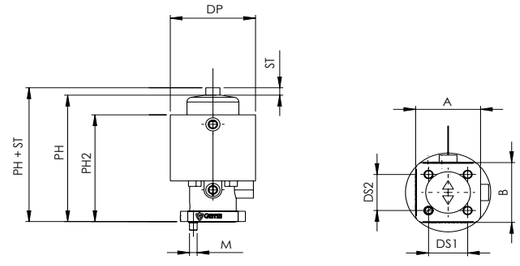

Dimensions, .RNN version

Type code	Listing/ DS	Options	A	B	DS1	DS2	DM	DP	PH	PH2	MH	ST	C1	C2	M	MC	Weight [kg]	Air volume [cm³]
D-AP-010-.RNN-01	NC / 010 / 6 bar	Stroke limiter, closing limiter, electric position indicator	36,5	36,5	22,0	22,0	39,5	38,0	77,7	65,6	56,1	4,5	19,3	59,7	M4	M5	0,4	7
D-AP-015-.RNN-01	NC / 015 / 6 bar	Stroke limiter, closing limiter, electric position indicator	55,6	53,6	37,0	33,0	60,0	56,0	90,0	77,9	68,7	7,0	22,9	72,9	M5	M5	0,8	26
D-AP-020-.RNN-01	NC / 020 / 6 bar	Stroke limiter, closing limiter, electric position indicator	69,2	64,2	45,0	40,0	78,0	66,0	99,4	87,4	82,8	9,0	27,9	82,4	M6	M5	1,1	42
D-AP-025-.RNN-01	NC / 025 / 6 bar	Stroke limiter, closing limiter, electric position indicator	81,2	75,2	54,0	46,0	90,0	76,0	109,8	97,7	95,0	11,0	29,3	87,2	M8	G1/8	1,6	65
D-AP-032-.RNN-01	NC / 032 / 6 bar	Stroke limiter, closing limiter, electric position indicator	96,2	89,7	67,0	60,0	100,0	92,0	120,1	108,1	103,7	13,0	32,9	97,6	M8	G1/8	2,5	104
D-AP-040-.RNN-01	NC / 040 / 6 bar	Stroke limiter, closing limiter, electric position indicator	109,8	99,8	70,0	65,0	118,0	107,0	133,9	121,8	119,4	16,0	37,4	111,3	M10	G1/8	3,6	173
D-AP-050-.RNN-01	NC / 050 / 6 bar	Stroke limiter, closing limiter, electric position indicator	130,4	116,4	82,0	78,0	148,0	122,0	158,5	146,4	129,6	22,0	48,3	135,9	M12	G1/8	5,4	283

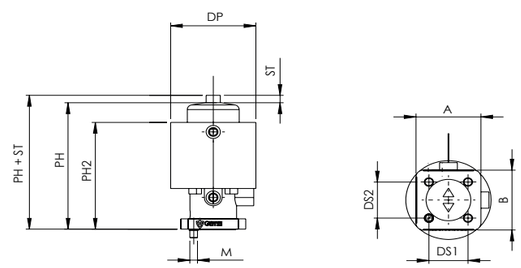

5.3. Position indicator

The intelligent position indicator measures the valve stroke entirely **contact-free and without any adjustment**. Thanks to automatic initialisation, manual adjustment is not required, which significantly reduces the installation effort. The simple adaptation option also allows for straightforward retrofitting of all pneumatic valves – even in existing systems.

It is suitable for **pneumatic actuators** of the 40000 series, **DS010 to DS05**0, as well as the **.CNN, .ONN and .RNN** versions, and integrates seamlessly into various actuator configurations.

As an **electric position indicator**, it provides precise position feedback from the actuator and enables reliable **monitoring of the switching status**. It supports system control through clear signals, ensures the **end position is reached** and facilitates troubleshooting through clear **on-site indication of the switching status**.

Features of the position indicator

- Automatic initialisation process, no manual adjustment required
- The teaching process can be started either via a data signal or on-site without opening the body
- Visual feedback on-site via an RGB LED
- Digital feedback of the positions 'closed', 'open' and 'error'
- Electrical connection via 8-pin M12 connector, A-coded

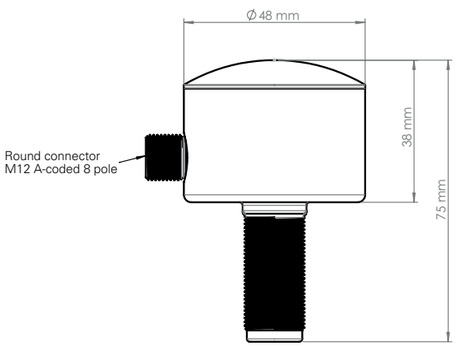

Electrical specifications	
Power supply	
Supply voltage:	24 V DC (±15 %) SELV / PELV
Current consumption:	0,3 A
Digital inputs	
Input current:	5 mA
Digital outputs	
Outlet voltage:	24 V DC
Outlet current:	0,1 A (0,2 A max., short-circuit proof)

Materials

Housing variant	Material	Article number	Type code
FG	1.4404	20001114	Z.EPNNN.FG.NN.F_16120808_50.NN.NNN
KU	POM	20001115	Z.EPNNN.KU.NN.M_16120808_50.NN.NNN

Wiring diagram for the position indicator

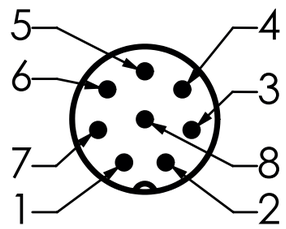

Pin assignment for 8-pin M12 circular connector, A-coded

Pin	Description	Signal	Comment
1	Power supply	24 V DC	
2	Outlet: Actuator 'open'	24 V DC	
3	Power supply	GND	
4	Outlet: Actuator 'closed'	24 V DC	
5	Programming input	24 V DC	
6	Control input	24 V DC	optional
7	Outlet: Actuator 'fault'	24 V DC	
8	n.c.	-	

Ordering example for an electric position indicator

Position indicator | Adaptation | Version

Z.EPNNN.FG.NN.F _16120808_ 50.NN.NNN (Investment casting)

Z.EPNNN.KU.NN.M _16120808_ 50.NN.NNN (Plastic)

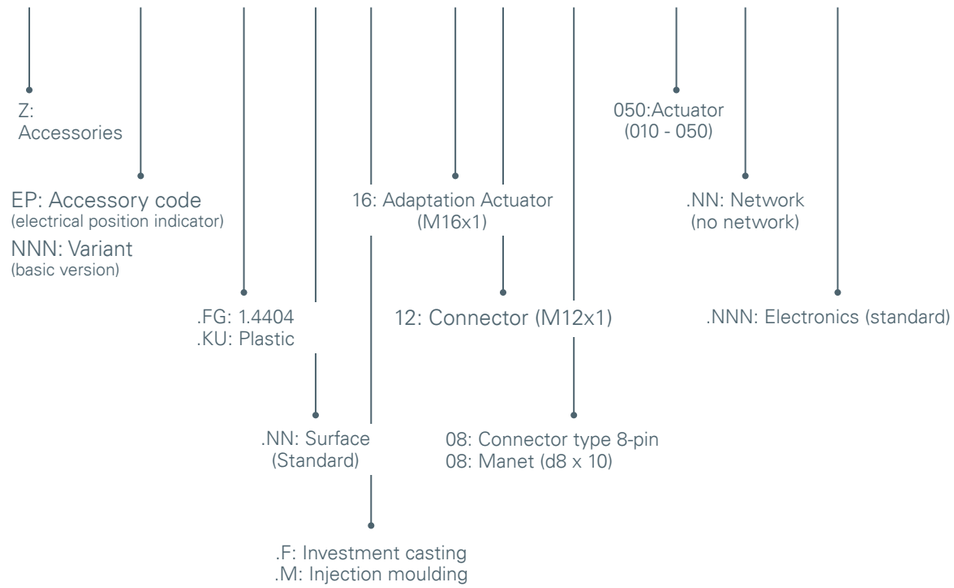

6. FAQ, GLOSSARY

3D rule
The distance from the lower edge of the main valve's internal diameter to the centre of the sealing flange of the welded-on sampling valve body must not exceed three times the internal diameter of the welded-on sampling valve body.

6D rule
The distance from the centreline of the inner diameter of the main valve to the centre of the sealing web of the welded-on sampling valve body must not exceed six times the inner diameter of the welded-on sampling valve body.

SAP valve
The term SAP valve (Sterile Access Port) defines a configuration of two fittings welded together, in which the straight through valve (1) is arranged horizontally. Depending on the application, the valve (2) is welded vertically either before or after the sealing web of the straight through valve (1).

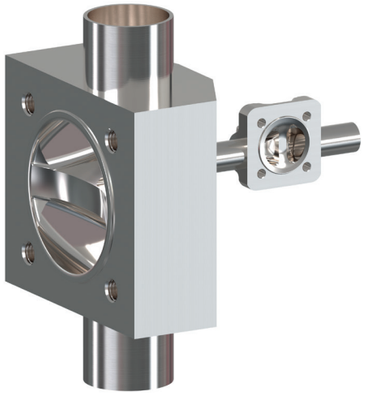

GMP valve
The term GMP valve (Good Manufacturing Practice) defines a configuration of two fittings welded together, in which the straight through valve (1) is arranged vertically. The valve (2) is welded horizontally, either before or after the sealing ridge of the straight through valve (1), depending on the application. It is rotated axially to such an extent that its sealing web is turned out of the flow path and the process medium can flow out unhindered even when the system is depressurised.

Position control / positioner
In position control, the positioner merely influences the actuator, e.g. the position of the valve. The sensor transmits the controlled variable to a PLC. This compares it with the reference variable, calculates the control difference and transmits a corresponding control signal to the controller. The controller reacts accordingly and adjusts the valve position. This method of valve control is selected when a higher-level control system is present.

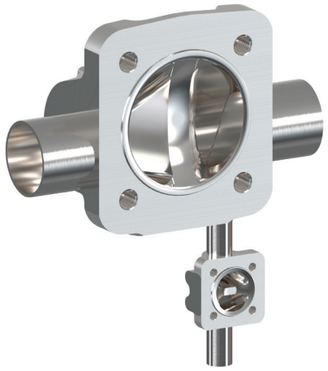

Process control / process controller
With a process controller, the controlled variable is transmitted directly to the controller, which is installed, for example, locally on the valve or in a control cabinet. This combines the functions of a PLC and a positioner. It calculates the controlled variable and transmits a corresponding signal to the valve. Modern process controllers can be configured both on-site at the plant and via a PLC.